MITSUBISHI ELECTRIC

SPLIT-TYPE AIR CONDITIONERS

Revision F:
- MSZ-HR60/71VFK-ER1 and MSZ-HR60/71VF-ER2 have been added.

OBH822 REVISED EDITION-E is void.

INDOOR UNIT

No. OBH822
REVISED EDITION-F

SERVICE MANUAL

Models

MSZ-HR25VF - E1, ER1, ET1, E2, ER2, ET2
MSZ-HR35VF - E1, ER1, ET1, E2, ER2, ET2
MSZ-HR42VF - E1, ER1, ET1, E2, ER2, ET2
MSZ-HR50VF - E1, ER1, ET1, E2, ER2, ET2
MSZ-HR60VF - E1, ER1, ET1, E2, ER2, ET2, E3
MSZ-HR71VF - E1, ER1, ET1, E2, ER2, ET2, E3

MSZ-HR25VFK - E1, ER1, ET1
MSZ-HR35VFK - E1, ER1, ET1
MSZ-HR42VFK - E1, ER1, ET1
MSZ-HR50VFK - E1, ER1, ET1
MSZ-HR60VFK - E1, ER1, ET1
MSZ-HR71VFK - E1, ER1, ET1

Outdoor unit service manual
MUZ-HR·VF Series (OBH823)
MXZ-HA·VF Series (OBH828)

MSZ-HR25VF

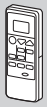

CONTENTS

1. TECHNICAL CHANGES ····· 3
2. PART NAMES AND FUNCTIONS ····· 4
3. SPECIFICATION ····· 5
4. NOISE CRITERIA CURVES ····· 7
5. OUTLINES AND DIMENSIONS ····· 9
6. WIRING DIAGRAM ····· 10
7. REFRIGERANT SYSTEM DIAGRAM ····· 15
8. SERVICE FUNCTIONS ····· 16
9. MICROPROCESSOR CONTROL ····· 19
10. TROUBLESHOOTING ····· 23
11. DISASSEMBLY INSTRUCTIONS ····· 42

PARTS CATALOG (OBB822)

Use the specified refrigerant only

Never use any refrigerant other than that specified.

Doing so may cause a burst, an explosion, or fire when the unit is being used, serviced, or disposed of.
Correct refrigerant is specified in the manuals and on the spec labels provided with our products.
We will not be held responsible for mechanical failure, system malfunction, unit breakdown or accidents caused by failure to follow the instructions.

<Preparation before the repair service>

- Prepare the proper tools.
- Prepare the proper protectors.
- Provide adequate ventilation.
- After stopping the operation of the air conditioner, turn off the power-supply breaker and pull the power plug.
- Discharge the capacitor before the work involving the electric parts.

<Precautions during the repair service>

- Do not perform the work involving the electric parts with wet hands.
- Do not pour water into the electric parts.
- Do not touch the refrigerant.
- Do not touch the hot or cold areas in the refrigeration cycle.
- When the repair or the inspection of the circuit needs to be done without turning off the power, exercise great caution not to touch the live parts.

⚠ WARNING

- **When the refrigeration circuit has a leak, do not execute pump down with the compressor.**
- **When pumping down the refrigerant, stop the compressor before disconnecting the refrigerant pipes. The compressor may burst if air etc. get into it.**
- **When opening or closing the valve below freezing temperatures, refrigerant may spurt out from the gap between the valve stem and the valve body, resulting in injuries.**

Revision A:

• MSZ-HR60/71VF- E1, ET1 have been added.

Revision B:

• MSZ-HR60/71VF- ER1 have been added.

Revision C:

• 10. TROUBLESHOOTING has been modified.

Revision D:

• MSZ-HR60/71VF- E2 have been added.

Revision E:

• MSZ-HR25/35/42/50/60/71VFK- E1, ET1, MSZ-HR25/35/42/50VFK- ER1, MSZ-HR25/35/42/50VF- E2, ER2, ET2 and MSZ-HR60/71VF- ET2, E3 have been added.

Revision F:

• MSZ-HR60/71VFK- ER1 and MSZ-HR60/71VF- ER2 have been added.

1 TECHNICAL CHANGES

MSZ-HR25VF -E1, ER1, ET1
MSZ-HR35VF -E1, ER1, ET1
MSZ-HR42VF -E1, ER1, ET1
MSZ-HR50VF -E1, ER1, ET1
MSZ-HR60VF -E1, ER1, ET1
MSZ-HR71VF -E1, ER1, ET1

1. New model

MSZ-HR60VF -E1 → MSZ-HR60VF -E2
MSZ-HR71VF -E1 → MSZ-HR60VF -E2

1. Model name has been changed.

MSZ-HR25VF -E1, ER1, ET1 → MSZ-HR25VF -E2, ER2, ET2
MSZ-HR35VF -E1, ER1, ET1 → MSZ-HR35VF -E2, ER2, ET2
MSZ-HR42VF -E1, ER1, ET1 → MSZ-HR42VF -E2, ER2, ET2
MSZ-HR50VF -E1, ER1, ET1 → MSZ-HR50VF -E2, ER2, ET2

1. Indoor control P.C. board has been changed.

MSZ-HR60VF -ET1 → MSZ-HR60VF -ET2
MSZ-HR60VF -E2 → MSZ-HR60VF -E3
MSZ-HR71VF -ET1 → MSZ-HR60VF -ET2
MSZ-HR71VF -E2 → MSZ-HR60VF -E3

1. Power P.C. board has been changed.

MSZ-HR25VFK -E1, ER1, ET1
MSZ-HR35VFK -E1, ER1, ET1
MSZ-HR42VFK -E1, ER1, ET1
MSZ-HR50VFK -E1, ER1, ET1
MSZ-HR60VFK -E1, ET1
MSZ-HR71VFK -E1, ET1

1. New model

MSZ-HR60VF -ER1 → MSZ-HR60VF -ER2
MSZ-HR71VF -ER1 → MSZ-HR71VF -ER2

1. Power P.C. board has been changed.

MSZ-HR60VFK -ER1
MSZ-HR71VFK -ER1

1. New model

2 PART NAMES AND FUNCTIONS

MSZ-HR25VF MSZ-HR35VF MSZ-HR42VF MSZ-HR50VF
MSZ-HR25VFK MSZ-HR35VFK MSZ-HR42VFK MSZ-HR50VFK

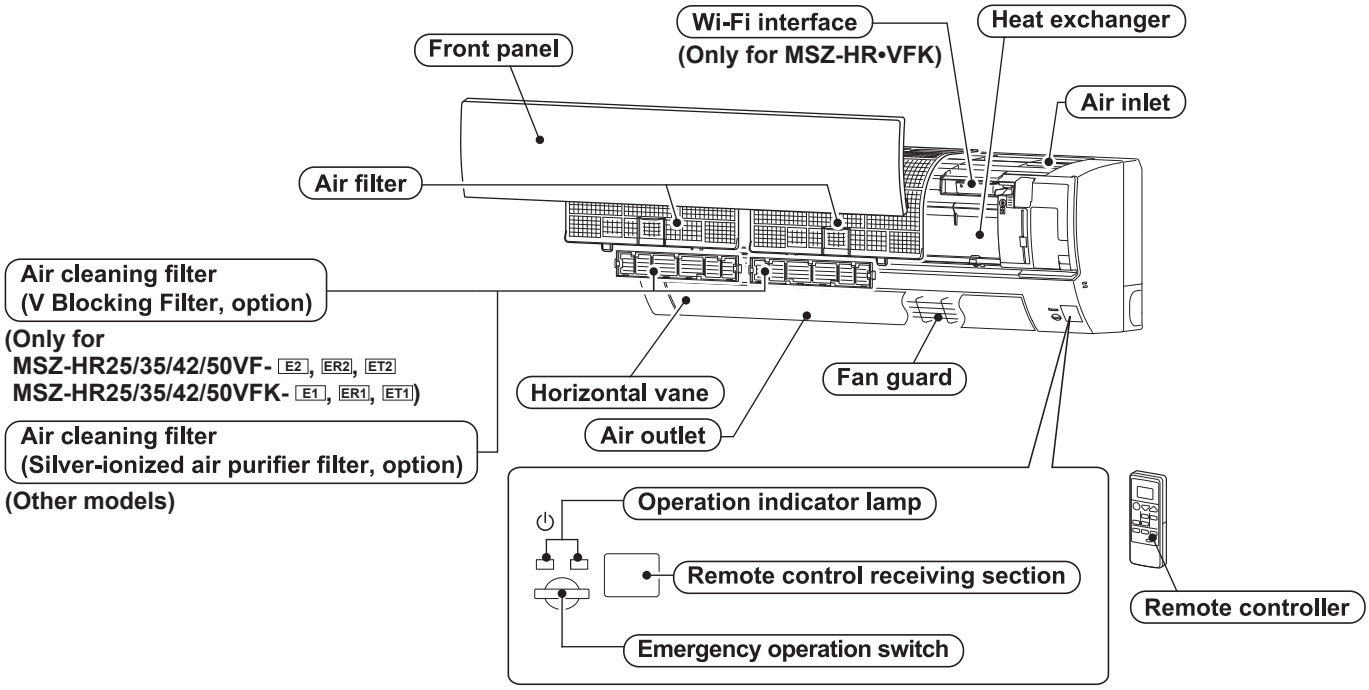

MSZ-HR60VF MSZ-HR71VF
MSZ-HR60VFK MSZ-HR71VFK

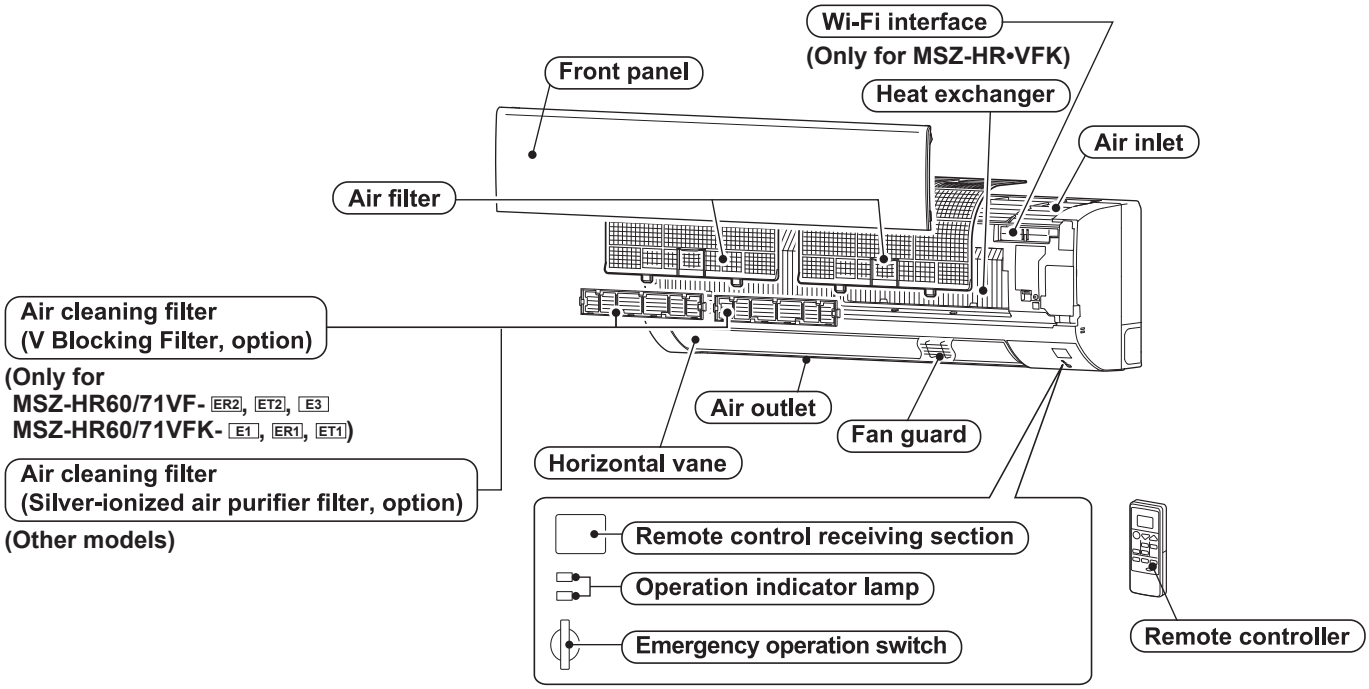

ACCESSORIES

	Model	MSZ-HR25VF MSZ-HR25VFK MSZ-HR35VF MSZ-HR35VFK MSZ-HR42VF MSZ-HR42VFK MSZ-HR50VF MSZ-HR50VFK MSZ-HR60VF MSZ-HR60VFK MSZ-HR71VF MSZ-HR71VFK
①	Installation plate	1
②	Installation plate fixing screw 4 × 25 mm	5
③	Wireless remote controller	1
④	Felt tape (For left or left-rear piping)	1
⑤	Battery (AAA) for remote controller	2

3 SPECIFICATION

Indoor model					MSZ-HR25VF MSZ-HR25VFK	MSZ-HR35VF MSZ-HR35VFK	MSZ-HR42VF MSZ-HR42VFK	MSZ-HR50VF MSZ-HR50VFK
Power supply					Single phase 230 V, 50 Hz			
Electrical data	Power input *1		Cooling	W	20	28	32	39
			Heating		20	28	32	39
	Running current *1		Cooling	A	0.20	0.27	0.30	0.36
			Heating		0.20	0.27	0.30	0.36
Fan motor	Model				RC0J30-CV	RC0J30-CV	RC0J30-CV	RC0J30-CV
	Current *1		Cooling	A	0.20	0.27	0.30	0.36
			Heating		0.20	0.27	0.30	0.36
Dimensions W × H × D				mm	838 × 280 × 228	838 × 280 × 228	838 × 280 × 228	838 × 280 × 228
Weight				kg	8.5	8.5	9.0	9.0
Special remarks	Air direction				5	5	5	5
	Airflow	Cooling	Super High	m^3/h	582	702	786	786
			High		432	468	648	672
			Med.		324	336	522	522
			Low		216	216	360	384
		Heating	Super High		606	630	804	870
			High		444	444	648	672
			Med.		324	324	474	498
			Low		198	198	336	366
	Sound level	Cooling	Super High	dB(A)	43	46	45	45
			High		37	38	39	40
			Med.		30	31	34	36
			Low		21	22	24	28
		Heating	Super High		43	44	46	47
			High		37	37	40	41
			Med.		30	30	32	34
			Low		21	21	24	27
	Fan speed	Cooling	Super High	rpm	1,120	1,280	1,130	1,130
			High		900	950	970	1,000
			Med.		730	750	830	860
			Low		550	550	630	660
		Heating	Super High		1,150	1,180	1,150	1,220
			High		920	920	970	1,000
			Med.		730	730	770	800
			Low		520	520	600	640
	Fan speed regulator				4	4	4	4
Remote controller model					RH18A	RH18A	RH18A	RH18A

NOTE: Test conditions are based on ISO 5151.

Cooling: Indoor Dry-bulb temperature 27°C Wet-bulb temperature 19°C
Outdoor Dry-bulb temperature 35°C Wet-bulb temperature 24°C
Heating: Indoor Dry-bulb temperature 20°C Wet-bulb temperature -
Outdoor Dry-bulb temperature 7°C Wet-bulb temperature 6°C
*1 Measured under rated operating frequency.

Specifications and rated conditions of main electric parts

Fuse	(F11)	T3.15AL250V
Horizontal vane motor	(MV)	12 V DC
Varistor	(NR11)	470 V
Terminal block	(TB)	3P

Indoor model					MSZ-HR60VF MSZ-HR60VFK	MSZ-HR71VF MSZ-HR71VFK
Power supply					Single phase 230 V, 50 Hz	Single phase 230 V, 50 Hz
Electrical data	Power input *1		Cooling	W	55	55
			Heating		55	55
	Running current *1		Cooling	A	0.50	0.50
			Heating		0.50	0.50
Fan motor	Model				RC0J40-SA	RC0J40-SA
	Current *1		Cooling	A	0.50	0.50
			Heating		0.50	0.50
Dimensions W × H × D				mm	923 × 305 × 262	923 × 305 × 262
Weight				kg	12.5	12.5
Special remarks	Air direction				5	5
	Airflow	Cooling	Super High	m^3/h	1,176	1,176
			High		924	924
			Med.		756	756
			Low		624	624
		Heating	Super High	m^3/h	1,176	1,176
			High		1,002	1,002
			Med.		786	786
			Low		642	642
	Sound level	Cooling	Super High	dB(A)	50	50
			High		44	44
			Med.		38	38
			Low		33	33
		Heating	Super High	dB(A)	50	50
			High		44	44
			Med.		38	38
			Low		33	33
	Fan speed	Cooling	Super High	rpm	1,220	1,220
			High		1,000	1,000
			Med.		850	850
			Low		730	730
		Heating	Super High	rpm	1,220	1,220
			High		1,070	1,070
			Med.		880	880
			Low		750	750
	Fan speed regulator				4	4
Remote controller model					RH18A	RH18A

NOTE : Test conditions are based on ISO 5151.

Cooling : Indoor Dry-bulb temperature 27°C Wet-bulb temperature 19°C
Outdoor Dry-bulb temperature 35°C
Heating : Indoor Dry-bulb temperature 20°C
Outdoor Dry-bulb temperature 7°C Wet-bulb temperature 6°C
*1 Measured under rated operating frequency.

Specifications and rated conditions of main electric parts

Fuse	(F11)	T3.15AL250V
Horizontal vane motor	(MV)	12 V DC
Varistor	(NR11)	470V
Terminal block	(TB)	3P

4 NOISE CRITERIA CURVES

MSZ-HR25VF
MSZ-HR25VFK

FUNCTION	SPL(dB(A))	LINE
COOLING	43	●——●
HEATING	43	○——○

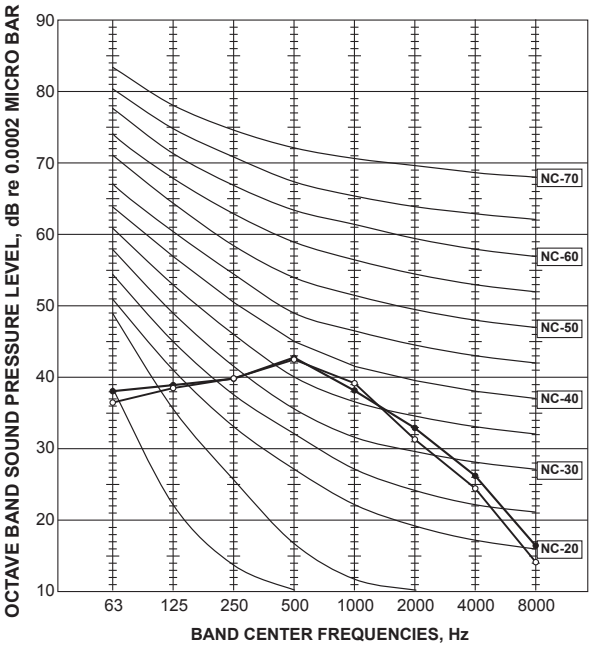

MSZ-HR35VF
MSZ-HR35VFK

FUNCTION	SPL(dB(A))	LINE
COOLING	46	●——●
HEATING	44	○——○

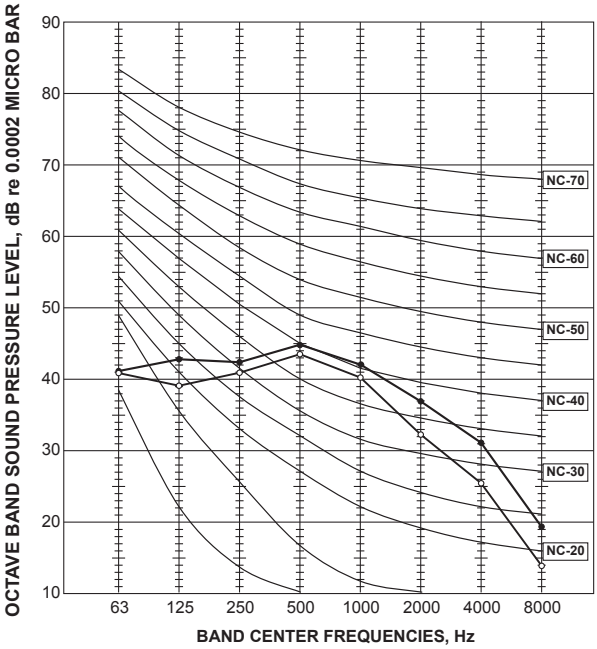

MSZ-HR42VF
MSZ-HR42VFK

FUNCTION	SPL(dB(A))	LINE
COOLING	45	●——●
HEATING	46	○——○

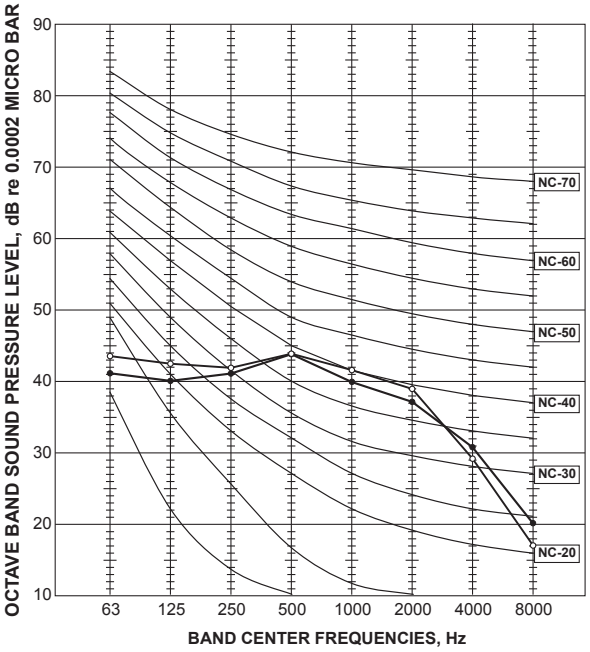

MSZ-HR50VF
MSZ-HR50VFK

FUNCTION	SPL(dB(A))	LINE
COOLING	45	●——●
HEATING	47	○——○

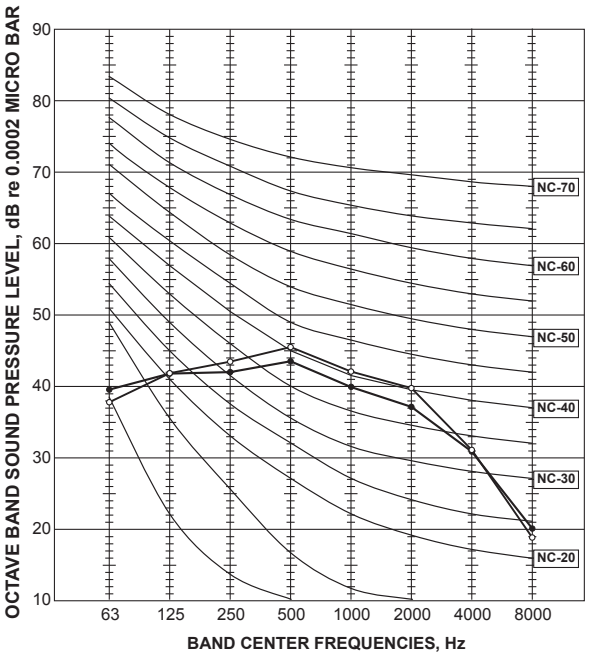

MSZ-HR60VF
MSZ-HR60VFK

FAN SPEED	FUNCTION	SPL(dB(A))	LINE
Super High	COOLING	50	●——●
	HEATING	50	○——○

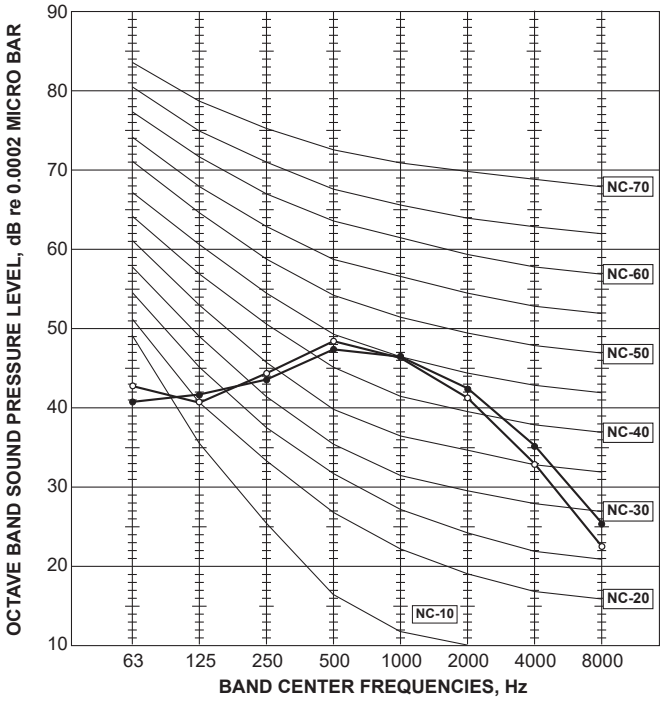

MSZ-HR71VF
MSZ-HR71VFK

FAN SPEED	FUNCTION	SPL(dB(A))	LINE
Super High	COOLING	50	●——●
	HEATING	50	○——○

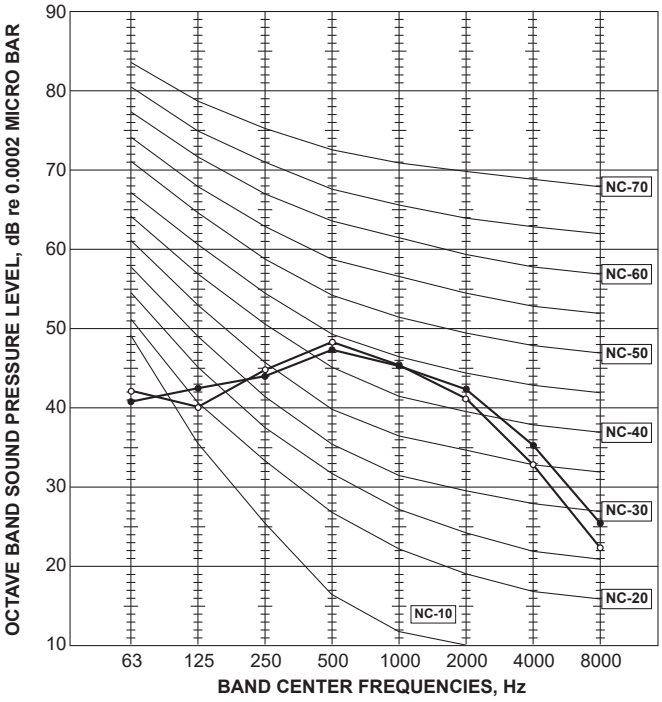

Test conditions

Cooling : Dry-bulb temperature 27°C Wet-bulb temperature 19°C
Heating : Dry-bulb temperature 20°C

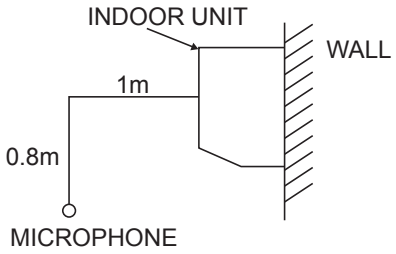

5 OUTLINES AND DIMENSIONS

MSZ-HR25VF MSZ-HR35VF MSZ-HR42VF MSZ-HR50VF
MSZ-HR25VFK MSZ-HR35VFK MSZ-HR42VFK MSZ-HR50VFK

Unit: mm

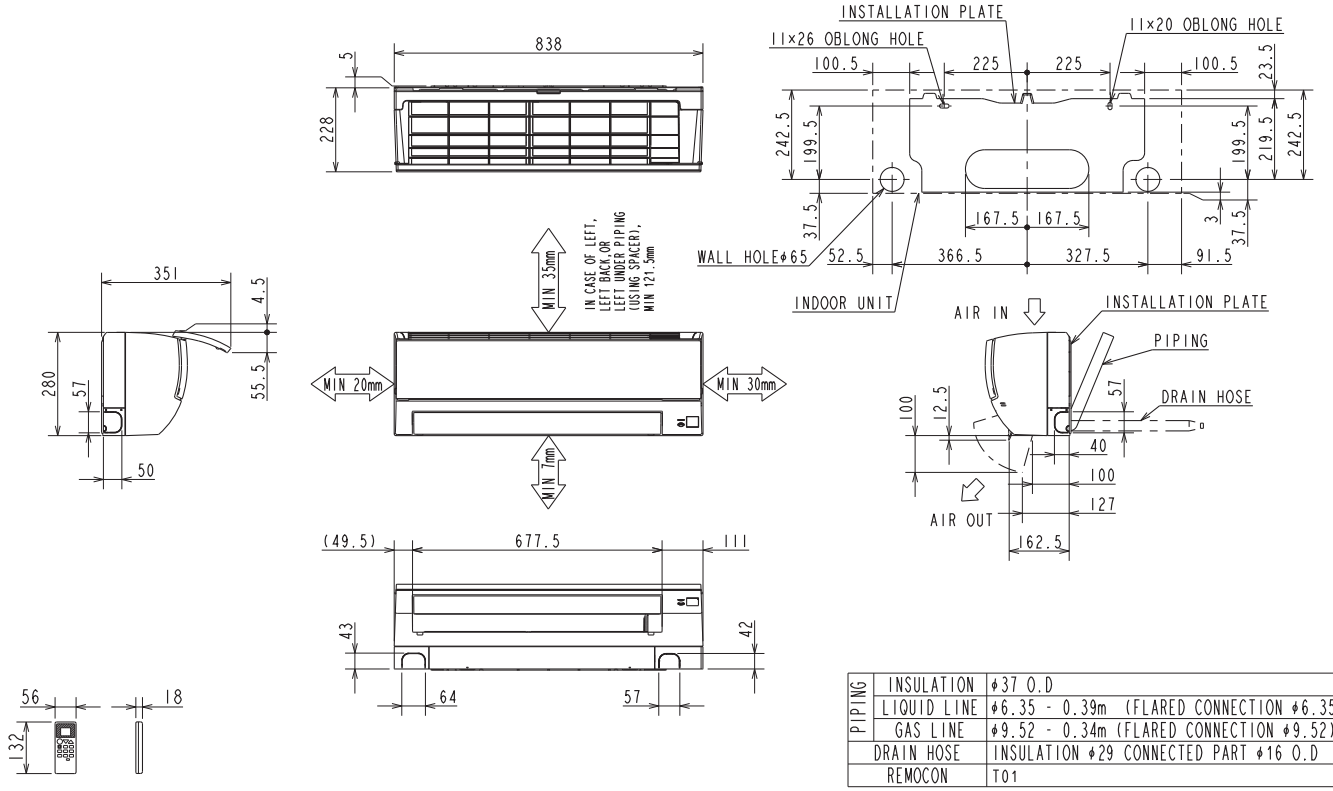

PIPING	INSULATION	φ37 O.D
	LIQUID LINE	φ6.35 - 0.39m (FLARED CONNECTION φ6.35)
	GAS LINE	φ9.52 - 0.34m (FLARED CONNECTION φ9.52)
DRAIN HOSE		INSULATION φ29 CONNECTED PART φ16 O.D
REMOCON		T01

MSZ-HR60VF MSZ-HR71VF
MSZ-HR60VFK MSZ-HR71VFK

Unit: mm

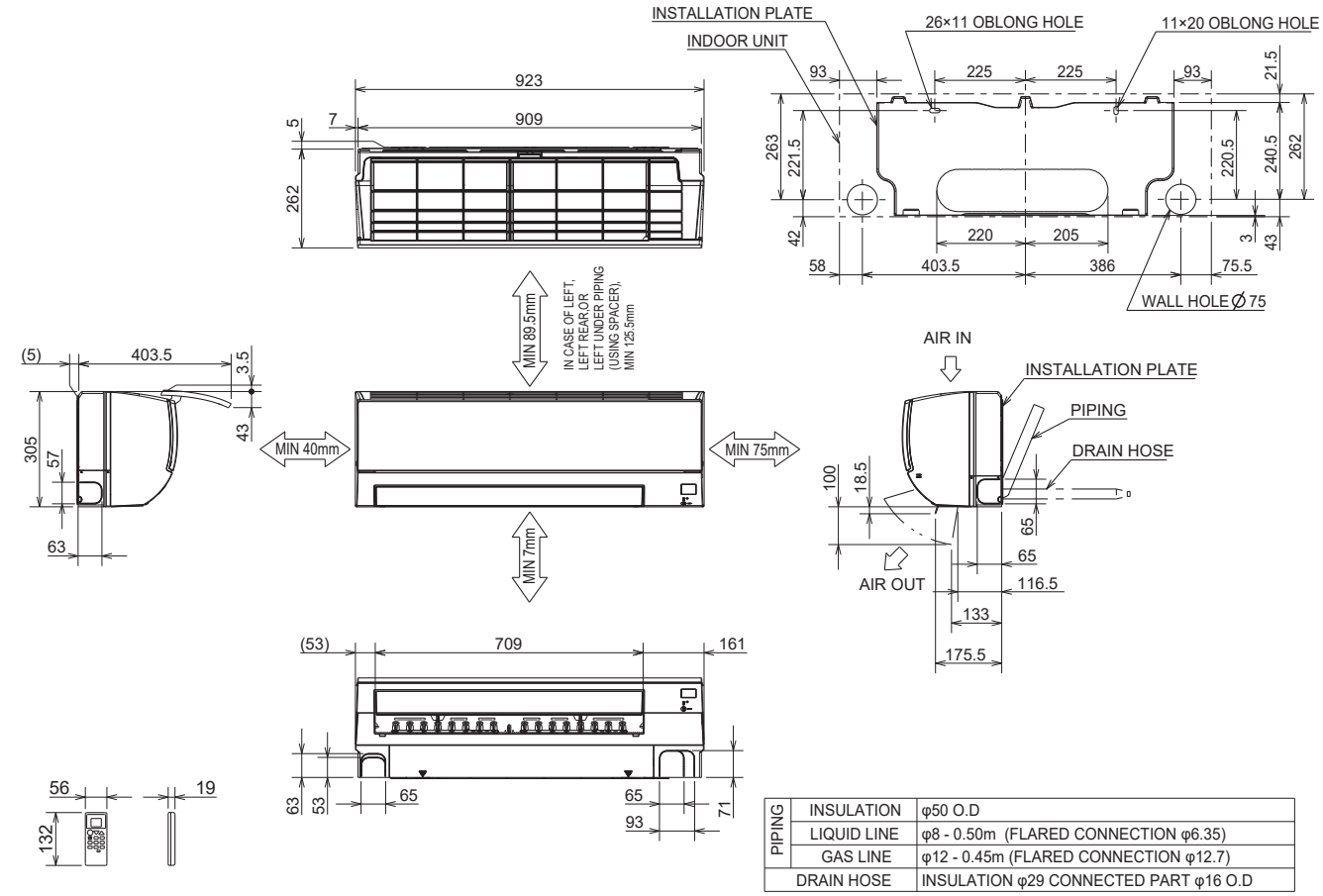

PIPING	INSULATION	φ50 O.D
	LIQUID LINE	φ8 - 0.50m (FLARED CONNECTION φ6.35)
	GAS LINE	φ12 - 0.45m (FLARED CONNECTION φ12.7)
DRAIN HOSE		INSULATION φ29 CONNECTED PART φ16 O.D

6 WIRING DIAGRAM

MSZ-HR25VF - E1, ER1, ET1 MSZ-HR35VF - E1, ER1, ET1 MSZ-HR42VF - E1, ER1, ET1
MSZ-HR50VF - E1, ER1, ET1

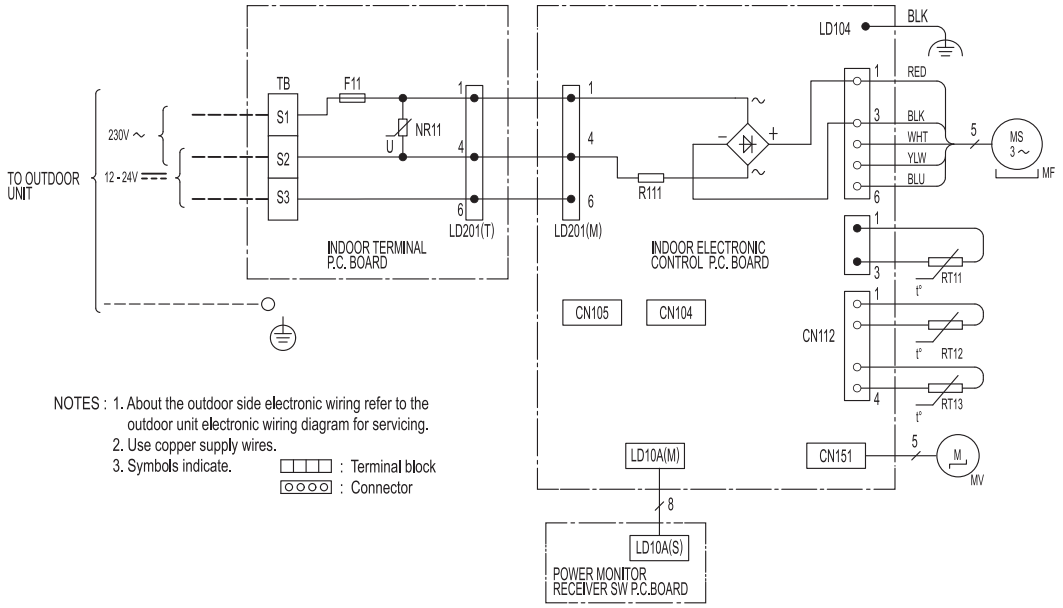

NOTES : 1. About the outdoor side electronic wiring refer to the outdoor unit electronic wiring diagram for servicing.
2. Use copper supply wires.
3. Symbols indicate. ▭ : Terminal block
▭ : Connector

SYMBOL	NAME
F11	FUSE (T3. 15AL250V)
MF	FAN MOTOR
MV	VANE MOTOR (HORIZONTAL)
NR11	VARISTOR
R111	RESISTOR
RT11	ROOM TEMP. THERMISTOR
RT12	COIL TEMP. THERMISTOR (MAIN)
RT13	COIL TEMP. THERMISTOR (SUB)
TB	TERMINAL BLOCK

MSZ-HR25VF - E2, ER2 MSZ-HR35VF - E2, ER2 MSZ-HR42VF - E2, ER2 MSZ-HR50VF - E2, ER2

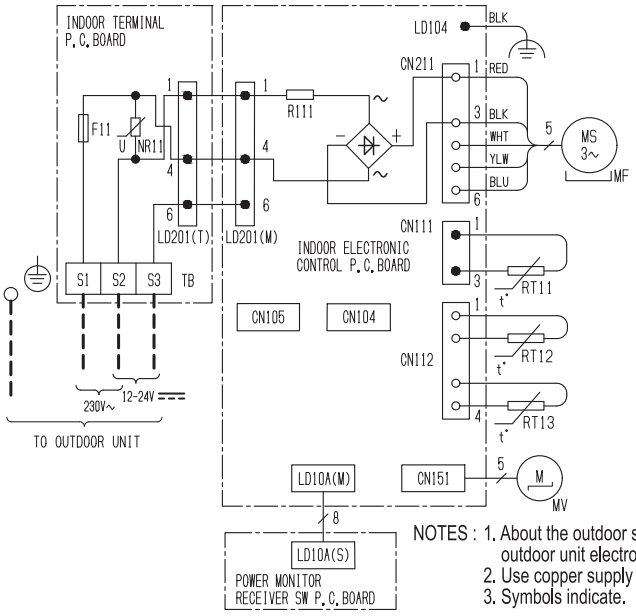

SYMBOL	NAME
F11	FUSE (T3. 15AL250V)
MF	FAN MOTOR
MV	VANE MOTOR (HORIZONTAL)
NR11	VARISTOR
R111	RESISTOR
RT11	ROOM TEMP. THERMISTOR
RT12	COIL TEMP. THERMISTOR (MAIN)
RT13	COIL TEMP. THERMISTOR(SUB)
TB	TERMINAL BLOCK

NOTES : 1. About the outdoor side electronic wiring refer to the outdoor unit electronic wiring diagram for servicing.
2. Use copper supply wires.
3. Symbols indicate. ▭ : Terminal block ▭ : Connector

MSZ-HR25VF - ET2 MSZ-HR35VF - ET2 MSZ-HR42VF - ET2 MSZ-HR50VF - ET2

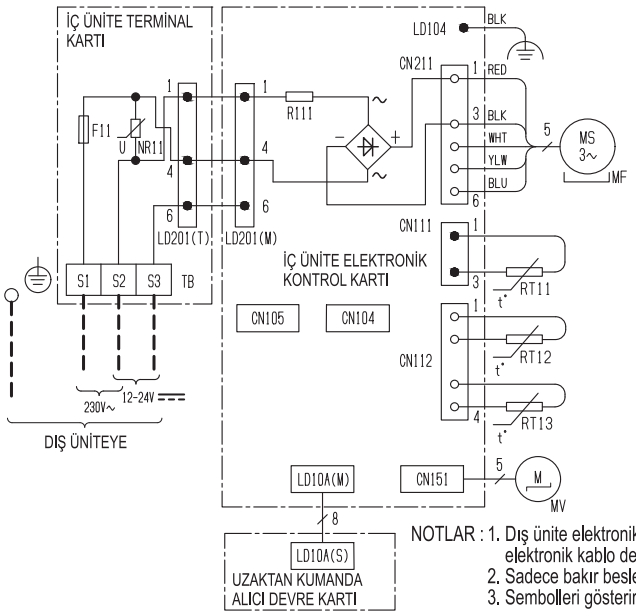

SEMBOL	PARÇA ADI
F11	SİGORTA (T3. 15AL250V)
MF	FAN MOTORU
MV	KANAT MOTORU (YATAY)
NR11	VARİSTÖR
R111	RESİSTÖR
RT11	ODA SICAKLIK TERMİSTÖRÜ
RT12	BORU SICAKLIK TERMİSTÖRÜ(ANA)
RT13	BORU SICAKLIK TERMİSTÖRÜ(YARDIMCI)
TB	TERMİNAL BLOĞU

NOTLAR : 1. Dış ünite elektronik kablolaması için dış ünite elektronik kablo devre şemasını referans alınız.
2. Sadece bakır besleme kablosu kullanın
3. Sembolleri gösterir : Terminal bloğu : Konektör

MSZ-HR25VFK - E1, ER1 MSZ-HR35VFK - E1, ER1 MSZ-HR42VFK - E1, ER1 MSZ-HR50VFK - E1, ER1

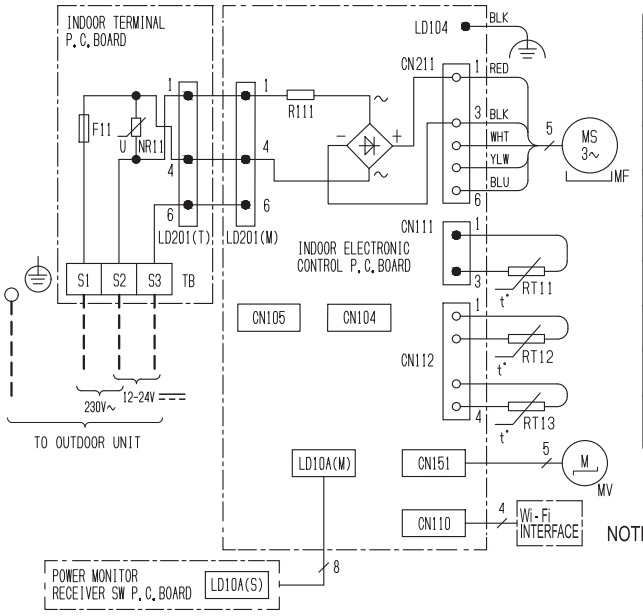

SYMBOL	NAME
F11	FUSE (T3. 15AL250V)
MF	FAN MOTOR
MV	VANE MOTOR (HORIZONTAL)
NR11	VARISTOR
R111	RESISTOR
RT11	ROOM TEMP. THERMISTOR
RT12	COIL TEMP. THERMISTOR (MAIN)
RT13	COIL TEMP. THERMISTOR(SUB)
TB	TERMINAL BLOCK

NOTES : 1. About the outdoor side electronic wiring refer to the outdoor unit electronic wiring diagram for servicing.
2. Use copper supply wires.
3. Symbols indicate. : Terminal block : Connector

MSZ-HR25VFK - ET1 MSZ-HR35VFK - ET1 MSZ-HR42VFK - ET1 MSZ-HR50VFK - ET1

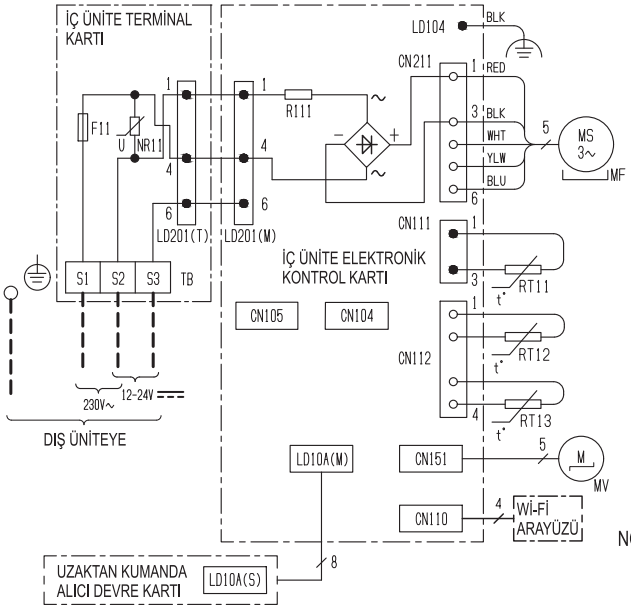

SEMBOL	PARÇA ADI
F11	SİGORTA (T3. 15AL250V)
MF	FAN MOTORU
MV	KANAT MOTORU (YATAY)
NR11	VARİSTÖR
R111	RESİSTÖR
RT11	ODA SICAKLIK TERMİSTÖRÜ
RT12	BORU SICAKLIK TERMİSTÖRÜ(ANA)
RT13	BORU SICAKLIK TERMİSTÖRÜ(YARDIMCI)
TB	TERMİNAL BLOĞU

NOTLAR : 1. Dış ünite elektronik kablolaması için dış ünite elektronik kablo devre şemasını referans alınız.
2. Sadece bakır besleme kablosu kullanın
3. Sembolleri gösterir ☐☐☐☐ : Terminal bloğu ○○○○ : Konektör

MSZ-HR60VF - E1, ER1, ET1, E2 MSZ-HR71VF - E1, ER1, ET1, E2

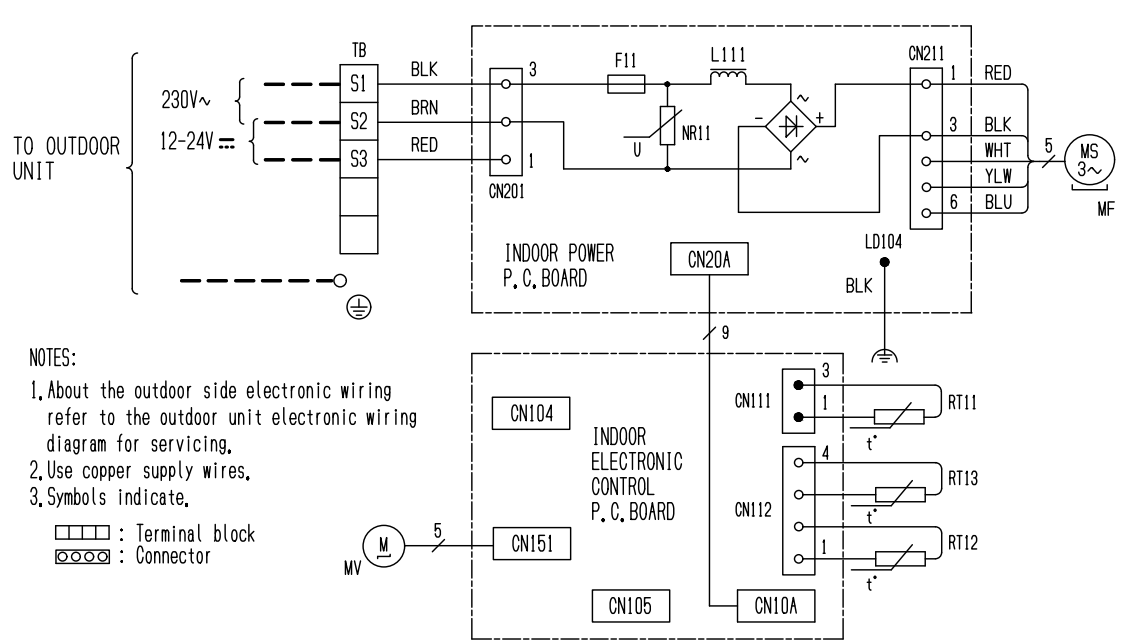

NOTES:
1. About the outdoor side electronic wiring refer to the outdoor unit electronic wiring diagram for servicing.
2. Use copper supply wires.
3. Symbols indicate.
☐☐☐☐ : Terminal block
○○○○ : Connector

SYMBOL	NAME
F11	FUSE (T3.15AL250V)
L111	REACTOR
MF	FAN MOTOR
MV	VANE MOTOR (HORIZONTAL)
NR11	VARISTOR
RT11	ROOM TEMP. THERMISTOR
RT12	COIL TEMP. THERMISTOR (MAIN)
RT13	COIL TEMP. THERMISTOR (SUB)
TB	TERMINAL BLOCK

MSZ-HR60VF - ET2 MSZ-HR71VF - ET2

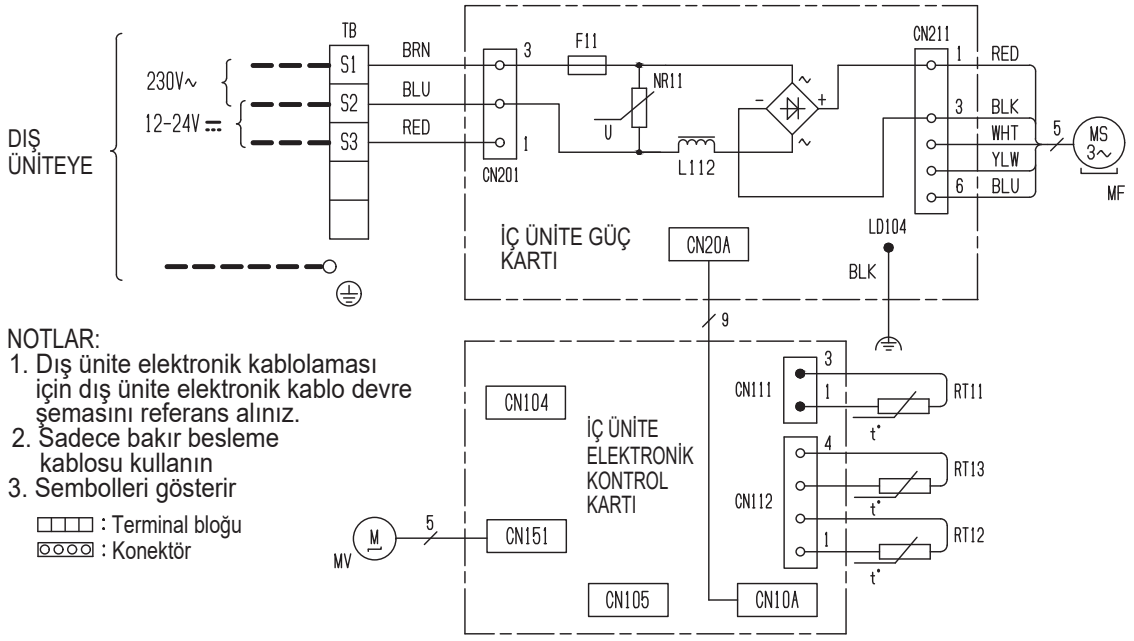

SEMBOL	PARÇA ADI
F11	SİGORTA (T3.15AL250V)
L112	REAKTÖR
MF	FAN MOTORU
MV	KANAT MOTORU (YATAY)
NR11	VARİSTÖR
RT11	ODA SICAKLIK TERMİSTÖRÜ
RT12	BORU SICAKLIK TERMİSTÖRÜ(ANA)
RT13	BORU SICAKLIK TERMİSTÖRÜ(YARDIMCI)
TB	TERMİNAL BLOĞU

NOTLAR:
1. Dış ünite elektronik kablolaması için dış ünite elektronik kablo devre şemasını referans alınız.
2. Sadece bakır besleme kablosu kullanın
3. Sembolleri gösterir

: Terminal bloğu
: Konektör

MSZ-HR60VF - ER2, E3 MSZ-HR71VF - ER2, E3

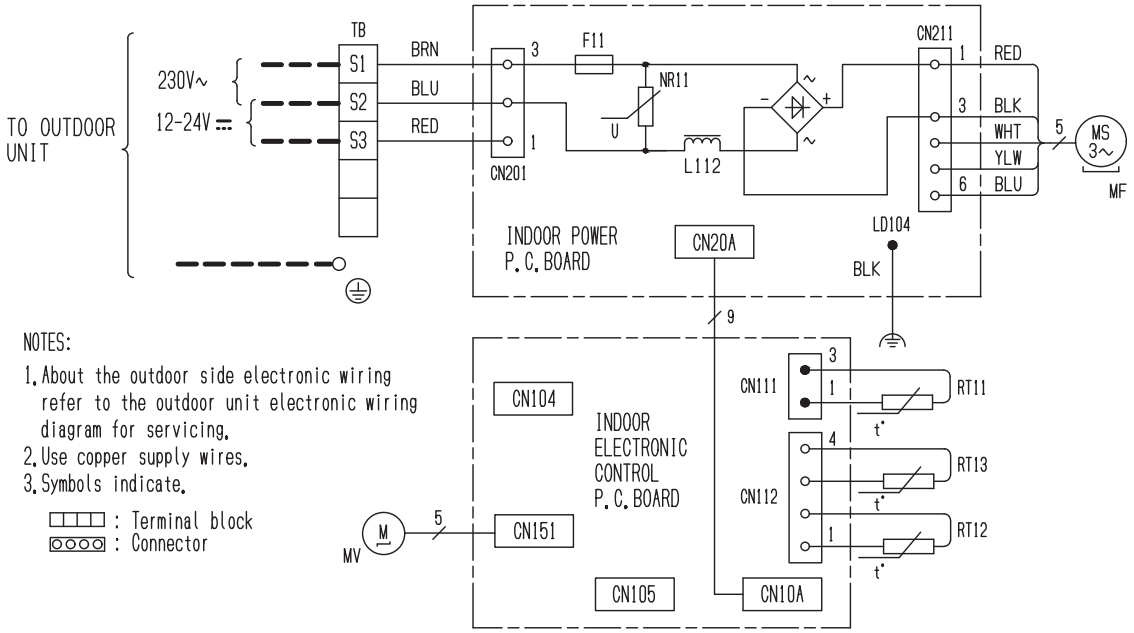

SYMBOL	NAME
F11	FUSE (T3.15AL250V)
L112	REACTOR
MF	FAN MOTOR
MV	VANE MOTOR (HORIZONTAL)
NR11	VARISTOR
RT11	ROOM TEMP. THERMISTOR
RT12	COIL TEMP. THERMISTOR (MAIN)
RT13	COIL TEMP. THERMISTOR (SUB)
TB	TERMINAL BLOCK

NOTES:
1. About the outdoor side electronic wiring refer to the outdoor unit electronic wiring diagram for servicing.
2. Use copper supply wires.
3. Symbols indicate.

: Terminal block
: Connector

MSZ-HR60VFK-E1, ER1 MSZ-HR71VFK-E1, ER1

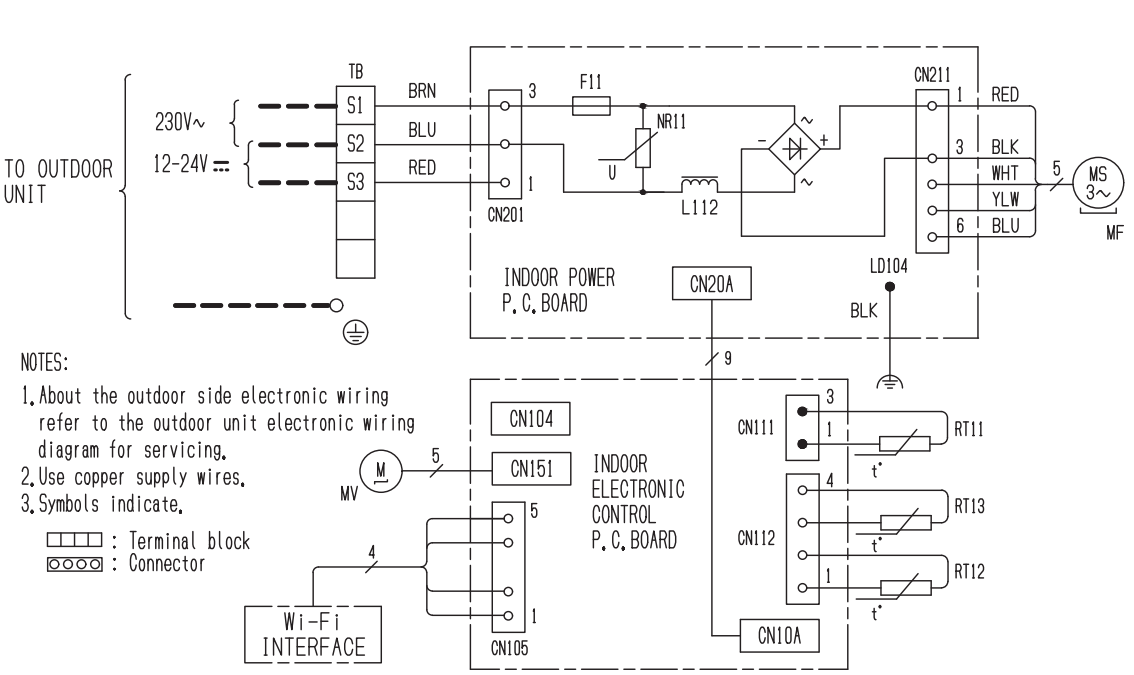

NOTES:

1. About the outdoor side electronic wiring refer to the outdoor unit electronic wiring diagram for servicing.
2. Use copper supply wires.
3. Symbols indicate.

□□□□ : Terminal block
⊡⊡⊡⊡ : Connector

SYMBOL	NAME
F11	FUSE (T3.15AL250V)
L112	REACTOR
MF	FAN MOTOR
MV	VANE MOTOR (HORIZONTAL)
NR11	VARISTOR
RT11	ROOM TEMP. THERMISTOR
RT12	COIL TEMP. THERMISTOR (MAIN)
RT13	COIL TEMP. THERMISTOR (SUB)
TB	TERMINAL BLOCK

MSZ-HR60VFK-ET1 MSZ-HR71VFK-ET1

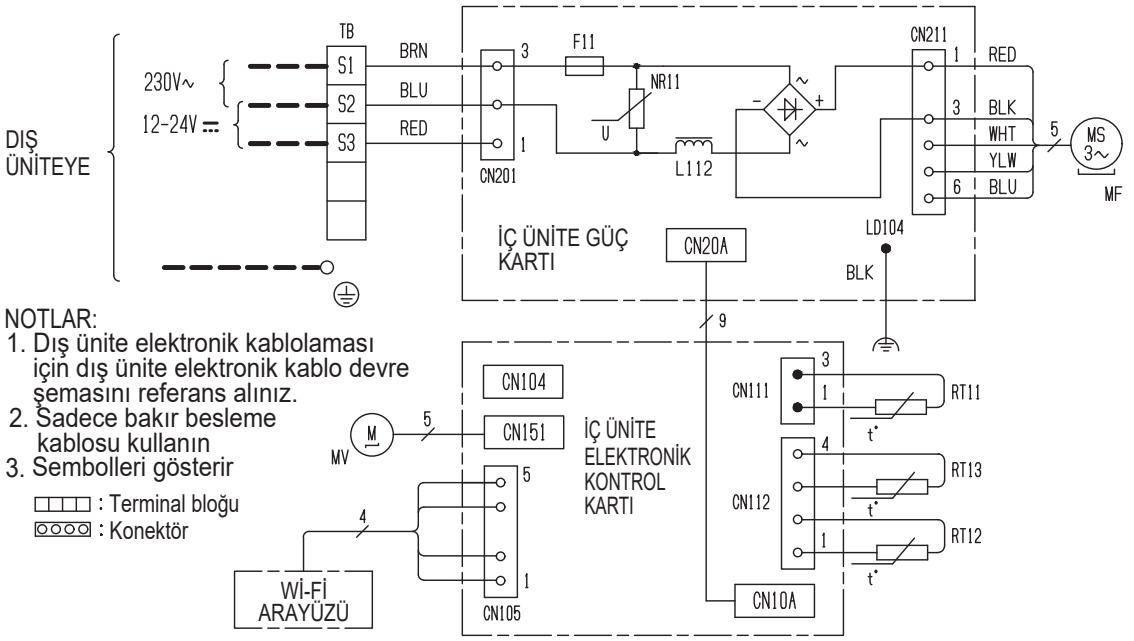

NOTLAR:

1. Dış ünite elektronik kablolaması için dış ünite elektronik kablo devre şemasını referans alınız.
2. Sadece bakır besleme kablosu kullanın
3. Sembolleri gösterir

□□□□ : Terminal bloğu
⊡⊡⊡⊡ : Konektör

SEMBOL	PARÇA ADI
F11	SİGORTA (T3.15AL250V)
L112	REAKTÖR
MF	FAN MOTORU
MV	KANAT MOTORU (YATAY)
NR11	VARİSTÖR
RT11	ODA SICAKLIK TERMİSTÖRÜ
RT12	BORU SICAKLIK TERMİSTÖRÜ(ANA)
RT13	BORU SICAKLIK TERMİSTÖRÜ(YARDIMCI)
TB	TERMİNAL BLOĞU

7 REFRIGERANT SYSTEM DIAGRAM

MSZ-HR25VF
MSZ-HR25VFK

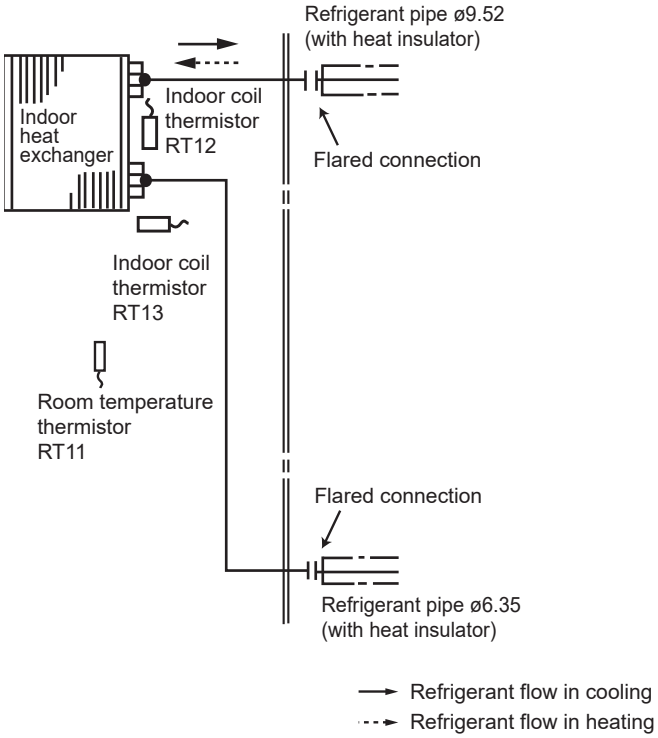

MSZ-HR35VF
MSZ-HR35VFK

Unit: mm

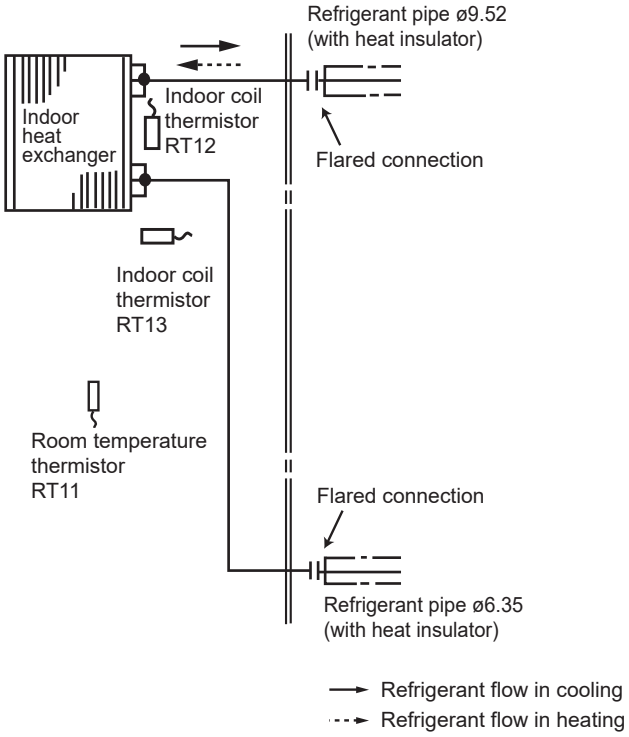

MSZ-HR42VF MSZ-HR50VF
MSZ-HR42VFK MSZ-HR50VFK

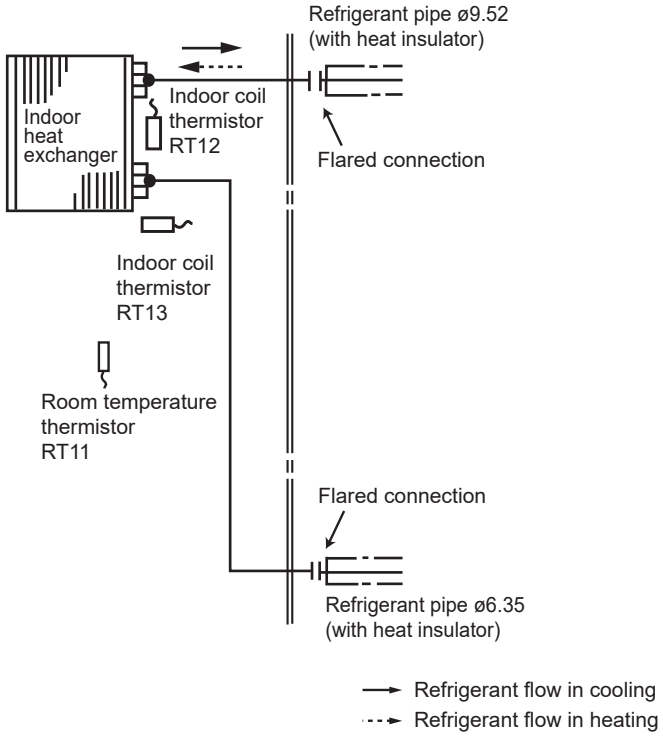

MSZ-HR60VF MSZ-HR71VF
MSZ-HR60VFK MSZ-HR71VFK

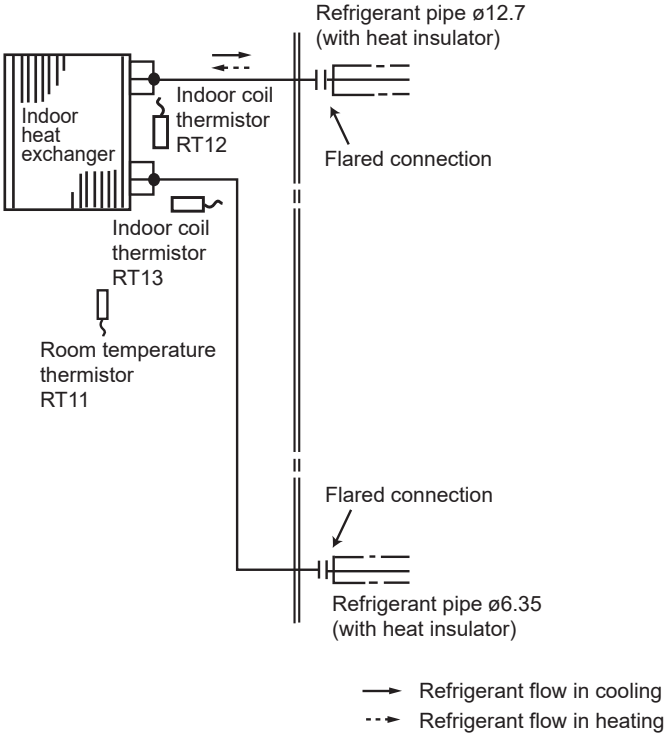

8 SERVICE FUNCTIONS

MSZ-HR25VF MSZ-HR35VF MSZ-HR42VF MSZ-HR50VF MSZ-HR60VF MSZ-HR71VF
MSZ-HR25VFK MSZ-HR35VFK MSZ-HR42VFK MSZ-HR50VFK MSZ-HR60VFK MSZ-HR71VFK

8-1. TIMER SHORT MODE

For service, the following set time can be shortened by bridging the timer short mode point on the electronic control P.C. board. (Refer to 10-7.)

- The set time for the ON/OFF timer can be reduced to 1 second for each minute.
- After the breaker is turned on, the time for starting the compressor, which normally takes 3 minutes, can be reduced to 1 minute. Restarting the compressor, which takes 3 minutes, cannot be reduced.

8-2. P.C. BOARD MODIFICATION FOR INDIVIDUAL OPERATION

A maximum of 4 indoor units with wireless remote controllers can be used in a room.
In this case, to operate each indoor unit individually by each remote controller, P.C. boards of remote controller must be modified according to the number of the indoor unit.

How to modify the remote controller P.C. board
Remove batteries before modification.
The board has a print as shown below :

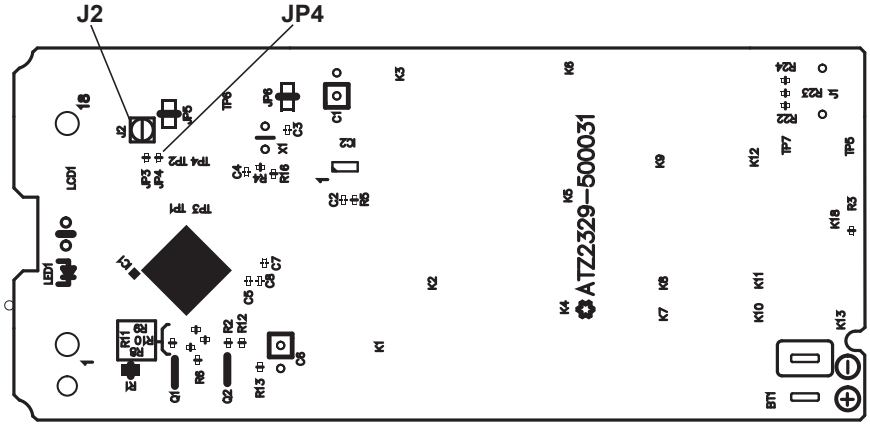

NOTE : For modification, take out the batteries and press the STOP/OPERATE/ (OFF/ ON) button 2 or 3 times at first.
After finish modification, put back the batteries then press the RESET button.

The P.C. board has the print “J2” and “J4/JP4”. Solder “J2” and “JP4” according to the number of indoor unit as shown in Table 1.
After modification, press the RESET button.

Table 1

	1 unit operation	2 units operation	3 units operation	4 units operation
No. 1 unit	No modification	Same as at left	Same as at left	Same as at left
No. 2 unit	—	Solder J2	Same as at left	Same as at left
No. 3 unit	—	—	Solder JP4	Same as at left
No. 4 unit	—	—	—	Solder both J2 and JP4

How to set the remote controller exclusively for particular indoor unit
After you turn the breaker ON, the first remote controller that sends the signal to the indoor unit will be regarded as the remote controller for the indoor unit.
The indoor unit will only accept the signal from the remote controller that has been assigned to the indoor unit once they are set.
The setting will be cancelled if the breaker is turned OFF, or the power supply is shut down.
Please conduct the above setting once again after the power has been restored.

8-3. AUTO RESTART FUNCTION

When the indoor unit is controlled with the remote controller, the operation mode, the set temperature, and the fan speed are memorized by the indoor electronic control P.C. board. “AUTO RESTART FUNCTION” automatically starts operation in the same mode just before the shutoff of the main power.

Operation

① If the main power has been cut, the operation settings remain.

② After the power is restored, the unit restarts automatically according to the memory.
(However, it takes at least 3 minutes for the compressor to start running.)

How to disable “AUTO RESTART FUNCTION”

① Turn off the main power for the unit.

② Cut the jumper wire to JR77 on the indoor electronic control P.C. board. (Refer to 10-7.)

HR25/35/42/50

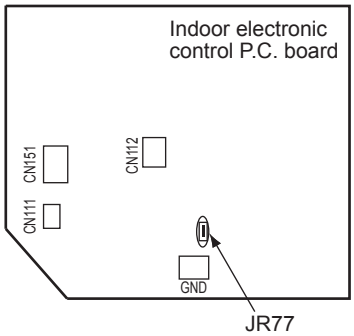

HR60/71

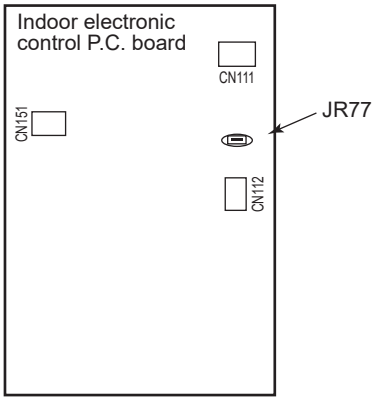

NOTE:

- The operation settings are memorized when 10 seconds have passed after the indoor unit was operated with the remote controller.
- If main power is turned OFF or a power failure occurs while AUTO START/STOP timer is active, the timer setting is cancelled.
- If the unit has been turned OFF with the remote controller before power failure, the auto restart function does not work as the power button of the remote controller is OFF.
- To prevent the breaker from tripping OFF due to the rush of starting current, systematize other home appliance not to turn ON at the same time.
- When some air conditioners are connected to the same supply system, if they are operated before power failure, the starting current of all the compressors may flow simultaneously at restart.
  Therefore, the special counter-measures are required to prevent the main voltage-drop or the rush of the starting current by adding to the system that allows the units to start one by one.

8-4. Wi-Fi INTERFACE SETTING UP (MSZ-HR·VFK)

This Wi-Fi interface communicates the status information and controls the commands from the MELCloud by connecting to an indoor unit.

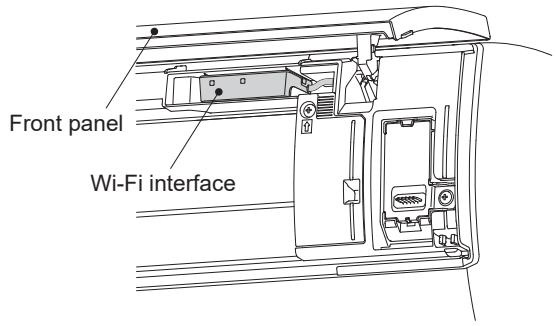

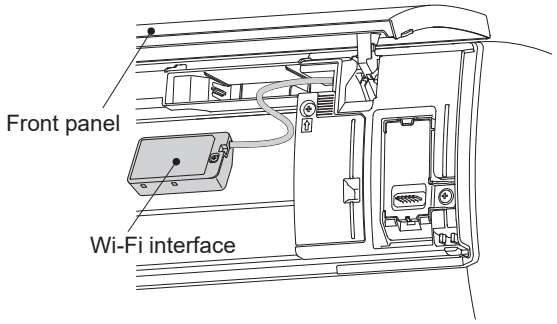

Wi-Fi interface introduction

No.	Item	Description
1	MODE switch	It selects modes.
2	RESET switch	It resets the system and ALL settings.
3	ERR LED (Orange)	It shows the network error state.
4	NET LED (Green)	It shows the network state.
5	MODE LED (Orange)	It shows the Access point mode state.
6	UNIT LED (Green)	It shows the indoor unit state.

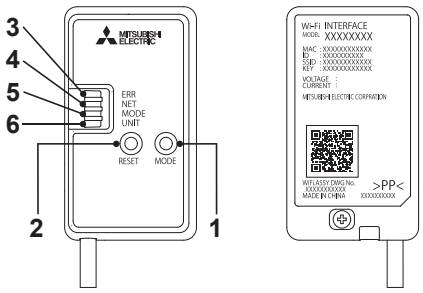

(1) MODE switch
- The MODE switch is used for selecting modes in configurations.

(2) RESET switch
- Hold down the RESET switch for 2 seconds to reboot the system.
- Hold down the RESET switch for 14 seconds to initialize the Wi-Fi interface to the factory default.

NOTE:
When the Wi-Fi interface is reset to the factory default, ALL the configuration information will be lost. Take great care in implementing this operation.

(1) Open the front panel and remove the Wi-Fi interface.
(2) Set up a connection between the Wi-Fi interface and the router.Refer to the SETUP MANUAL and SETUP QUICK REFERENCE GUIDE provided with the unit.
For SETUP MANUAL, please go to the website below.
https://www.melcloud.com/Support
(3) Put the Wi-Fi interface back and close the front panel after the setup is completed.
(4) For MELCloud User Manual, please go to the website below.
https://www.melcloud.com/Support

NOTE:

- Ensure that the Router supports the WPA2-AES encryption setting before starting the Wi-Fi interface setup.
- The End user should read and accept the terms and conditions of the Wi-Fi service before using this Wi-Fi interface.
- To complete connection of this Wi-Fi interface to the Wi-Fi service, the Router may be required.
- This Wi-Fi interface will not commence transmission of any operational data from the system until the End user registers and accepts the terms and conditions of the Wi-Fi service.
- This Wi-Fi interface should not be installed and connected to any Mitsubishi Electric system which is to provide application critical cooling or heating.
- At the time of relocation or disposal, reset the Wi-Fi interface to the factory default.

Mitsubishi Electric's Wi-Fi interface is designed for communication to Mitsubishi Electric's MELCloud Wi-Fi service. Third party Wi-Fi interfaces cannot be connected to MELCloud.
Mitsubishi Electric is not responsible for any (i) under performance of a system or any product; (ii) system or product fault; or (iii) loss or damage to any system or product; which is caused by or arises from connection to and/or use of any third party Wi-Fi interface or any third party Wi-Fi service with Mitsubishi Electric equipment.

For the latest information regarding MELCloud from Mitsubishi Electric Corporation, please visit www.melcloud.com

9 MICROPROCESSOR CONTROL

MSZ-HR25VF MSZ-HR35VF MSZ-HR42VF MSZ-HR50VF MSZ-HR60VF MSZ-HR71VF
MSZ-HR25VFK MSZ-HR35VFK MSZ-HR42VFK MSZ-HR50VFK MSZ-HR60VFK MSZ-HR71VFK

WIRELESS REMOTE CONTROLLER

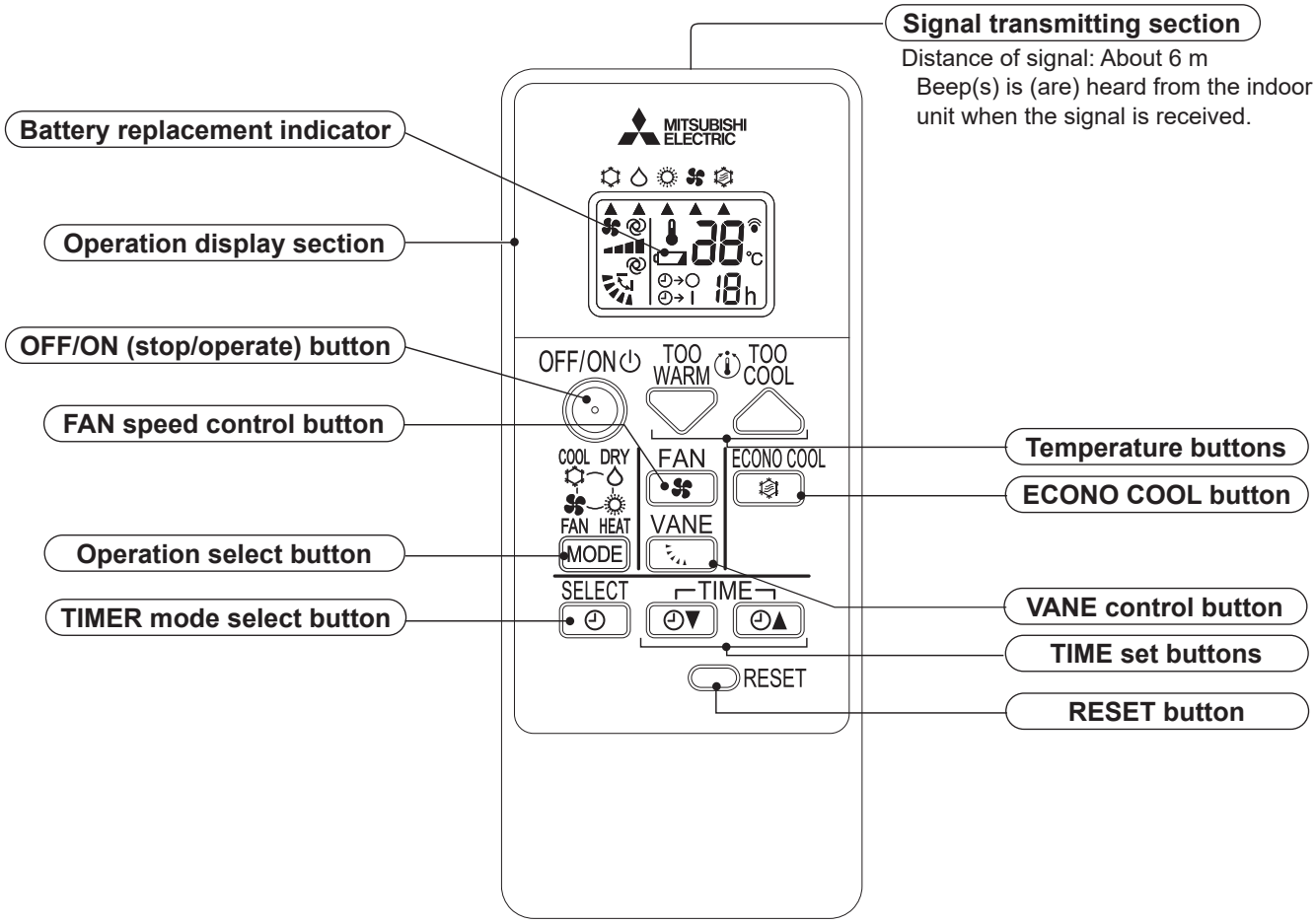

NOTE: Last setting will be stored after the unit is turned OFF with the remote controller. Indoor unit receives the signal of the remote controller with beeps.

INDOOR UNIT DISPLAY SECTION

Operation Indicator lamp

The operation indicator at the right side of the indoor unit indicates the operation state.

•The following indication applies regardless of shape of the indication.

Indication		Operation state	Room temperature
HR25/35/42/50VF	HR60/71VF		
● ●	● ●	The unit is operating to reach the set temperature	About 2°C or more away from set temperature
● ○	● ○	The room temperature is approaching the set temperature	About 1 to 2°C from set temperature
● ☼	● ☼	Standby mode (only during multi system operation)	—

● Lit
☼ Blinking
○ Not lit

9-1. COOL (☼) OPERATION

(1) Press OFF/ON (stop/operate) button.
OPERATION INDICATOR lamp of the indoor unit turns on with a beep tone.
(2) Select COOL mode with OPERATION SELECT button.
(3) Press TEMPERATURE buttons (TOO WARM or TOO COOL button) to select the set temperature. The setting range is 16 - 31°C.

1. Coil frost prevention

The compressor operational frequency is controlled by the temperature of the indoor heat exchanger to prevent the coil from frosting.
When the temperature of indoor heat exchanger becomes too low, the coil frost prevention mode works.
The indoor fan operates at the set speed and the compressor stops. This mode continues until the temperature of indoor heat exchanger rises.

2. Low outside temperature operation

When the outside temperature is lower, low outside temperature operation starts, and the outdoor fan slows or stops.

9-2. DRY (♢) OPERATION

(1) Press OFF/ON (stop/operate) button.
OPERATION INDICATOR lamp of the indoor unit turns on with a beep tone.
(2) Select DRY mode with OPERATION SELECT button.
(3) The set temperature is determined from the initial room temperature.

1. Coil frost prevention

Coil frost prevention works the same way as that in COOL mode. (9-1.1.)

2. Low outside temperature operation

Low outside temperature operation works the same way as that in COOL mode. (9-1.2.)

9-3. FAN(✿)OPERATION

(1) Press OFF/ON (stop/operate) button.
OPERATION INDICATOR lamp of the indoor unit turns ON with a beep tone.
(2) Select FAN mode with OPERATION SELECT button.
(3) Select the desired fan speed. When AUTO, it becomes Low.
Only indoor fan operates. Outdoor unit does not operate.

9-4. HEAT (☼) OPERATION

(1) Press OFF/ON (stop/operate) button.
OPERATION INDICATOR lamp of the indoor unit turns on with a beep tone.
(2) Select HEAT mode with OPERATION SELECT button.
(3) Press TEMPERATURE buttons (TOO WARM or TOO COOL button) to select the set temperature.
The setting range is 16 to 31°C.

1. Cold air prevention control

When the compressor is not operating or is starting, and the temperature of indoor heat exchanger and/or the room temperature is low or when defrosting is being done, the indoor fan will stop or rotate in Very Low speed.

2. High pressure protection

The compressor operational frequency is controlled by the temperature of the indoor heat exchanger to prevent the condensing pressure from increasing excessively.
When the temperature of indoor heat exchanger becomes too high, the high pressure protection works.
The indoor fan operates following the cold air prevention control. This mode continues until the temperature of indoor heat exchanger falls.

3. Defrosting

Defrosting starts when the temperature of outdoor heat exchanger becomes too low.
The compressor stops once, the indoor/outdoor fans stop, the 4-way valve reverses, and the compressor re-starts.
This mode continues until the temperature of outdoor heat exchanger rises or the fixed time passes.

9-5. MULTI SYSTEM OPERATION

FOR MULTI SYSTEM AIR CONDITIONER

OUTDOOR UNIT: MXZ series

Multi system air conditioner can connect 2 or more indoor units with 1 outdoor unit.

- When you try to operate 2 or more indoor units with 1 outdoor unit simultaneously, one for the cooling and the others for heating, the operation mode of the indoor unit that operates first is selected. Other indoor units cannot operate, and operation indicator lamp blinks as shown in the figure below. In this case, please set all the indoor units to the same operation mode.

HR25/35/42/50VF

OPERATION INDICATOR

HR60/71VF

OPERATION INDICATOR

- When indoor unit starts the operation while the defrosting of outdoor unit is being done, it takes a few minutes (max. 10 minutes) to blow out the warm air.
- In heating operation, though indoor unit is not operating, it may get warm or the sound of refrigerant flow may be heard. It is not malfunction. The reason is that the refrigerant continuously flows into it.

9-6. AUTO VANE OPERATION

1. Horizontal vane

(1) Vane motor drive

These models are equipped with a stepping motor for the horizontal vane. The rotating direction, speed, and angle of the motor are controlled by pulse signals (approximately 12 V) transmitted from indoor microprocessor.

(2) The horizontal vane angle and mode change as follows by pressing VANE CONTROL button.

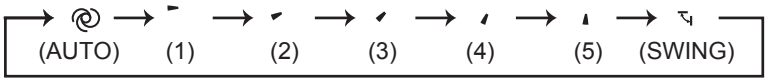

(3) Positioning

To confirm the standard position, the vane moves until it touches the vane stopper. Then the vane is set to the selected angle.

Confirmation of standard position is performed in the following cases:

(a) When the operation starts or finishes (including timer operation).
(b) When the test run starts.
(c) When standby mode (only during multi system operation) starts or finishes.

(4) VANE AUTO ( ) mode

In VANE AUTO mode, the microprocessor automatically determines the vane angle to make the optimum room temperature distribution.

In COOL and DRY operation
Vane angle is fixed to Horizontal position.

In HEAT operation
Vane angle is fixed to Angle 4.

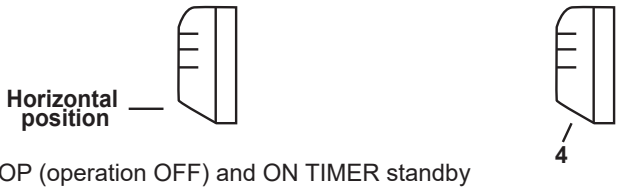

(5) STOP (operation OFF) and ON TIMER standby

In the following cases, the horizontal vane returns to the closed position.

(a) When OFF/ON (stop/operate) button is pressed (POWER OFF).
(b) When the operation is stopped by the emergency operation.
(c) When ON TIMER is ON standby.

(6) Dew prevention

During COOL or DRY operation with the vane angle at Angle 3 to 5 when the compressor cumulative operation time exceeds 1 hour, the vane angle automatically changes to Angle 2 for dew prevention.

(7) SWING ( ) mode

By selecting SWING mode with VANE CONTROL button, the horizontal vane swings vertically.

(8) ECONO COOL ( ) operation (ECONOmical operation)

When ECONO COOL button is pressed in COOL mode, set temperature and the airflow direction is automatically changed by the microprocessor. However, the temperature on the LCD screen on the remote controller is not changed. Also the horizontal vane swings in various cycle.

SWING operation makes you feel cooler than set temperature. So, even though the set temperature is higher, the air conditioner can keep comfort. As a result, energy can be saved.

To cancel this operation, select a different mode or press one of the following buttons in ECONO COOL operation: ECONO COOL, VANE CONTROL button.

9-7. TIMER OPERATION (ON/OFF TIMER)

1. How to set the timer

(1) Press STOP/OPERATE/ (OFF/ON) button to start the air conditioner.

(2) Select the timer mode by pressing the SELECT button during operation.

Each time this button is pressed, the timer mode is changed in sequence:
(OFF TIMER) → (ON TIMER) → TIMER RELEASE

(3) Set the time of the timer using the TIME button.

Each time this button is pressed, the set time increase or decrease by 1 hour to 12 hours.

2. To release the timer

Press the SELECT button until (OFF TIMER) and (ON TIMER) are not displayed.

NOTE :

- The OFF TIMER and the ON TIMER cannot be set at the same time.
- The displayed time is the time remaining and will decrease in 1-hour increments as time passes.

9-8. EMERGENCY/TEST OPERATION

In the case of test run operation or the emergency operation, use the emergency operation switch in the right side of the indoor unit. The emergency operation is available when the remote controller is missing or has failed, or when the batteries in the remote controller are running down. The unit will start and OPERATION INDICATOR lamp will light up.
The first 30 minutes of operation is the test run operation. This operation is for servicing. The indoor fan runs at High speed and the temperature control does not work.
After 30 minutes of test run operation, the system shifts to EMERGENCY COOL/HEAT MODE with a set temperature of 24°C. The fan speed shifts to Med.
The coil frost prevention works even in the test run or the emergency operation.
In the test run or the emergency operation, the horizontal vane operates in VANE AUTO (@) mode.
The emergency operation continues until the emergency operation switch is pressed once or twice or the unit receives any signal from the remote controller. In the latter case, normal operation will start.

NOTE: Do not press the emergency operation switch during normal operation.

Operation mode	COOL/HEAT
Set temperature	24°C
Fan speed	Med.
Horizontal vane	Auto

The operation mode is indicated by the Operation Indicator lamp as following Operation Indicator lamp

HR25/35/42/50VF

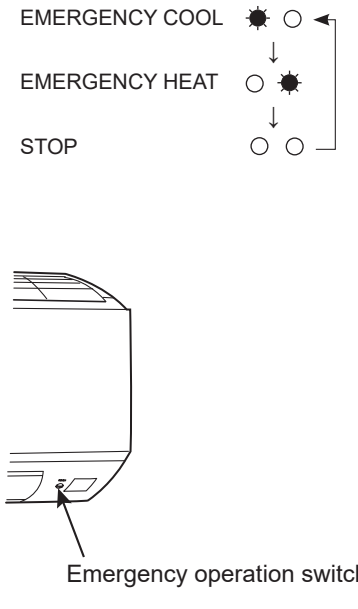

HR60/71VF

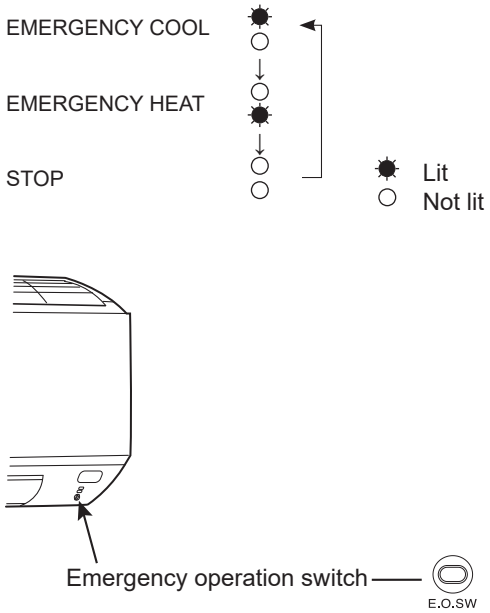

9-9. 3-MINUTE TIME DELAY OPERATION

When the system turns OFF, compressor will not restart for 3 minutes as 3-minute time delay function operates to protect compressor from overload.

10 TROUBLESHOOTING

MSZ-HR25VF MSZ-HR35VF MSZ-HR42VF MSZ-HR50VF MSZ-HR60VF MSZ-HR71VF
MSZ-HR25VFK MSZ-HR35VFK MSZ-HR42VFK MSZ-HR50VFK MSZ-HR60VFK MSZ-HR71VFK

10-1. CAUTIONS ON TROUBLESHOOTING

1. Before troubleshooting, check the following

1) Check the power supply voltage.
2) Check the indoor/outdoor connecting wire for miswiring.

2. Take care of the following during servicing

1) Before servicing the air conditioner, be sure to turn OFF the main unit first with the remote controller, and after confirming the horizontal vane is closed, turn OFF the breaker and/or disconnect the power plug.
2) Be sure to turn OFF the power supply before removing the front panel, the cabinet, the top panel, and the P.C. board.
3) When removing the P.C. board, hold the edge of the board with care NOT to apply stress on the components.
4) When connecting or disconnecting the connectors, hold the connector housing. DO NOT pull the lead wires.

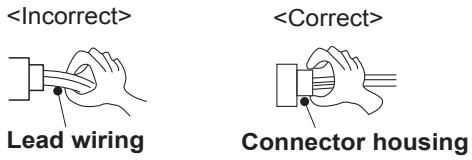

3. Troubleshooting procedure

1) Check if the OPERATION INDICATOR lamp on the indoor unit is blinking ON and OFF to indicate an abnormality. To make sure, check how many times the OPERATION INDICATOR lamp is blinking ON and OFF before starting service work.
2) Before servicing, verify that all connectors and terminals are connected properly.
3) When the electronic control P.C. board seems to be defective, check for disconnection of the copper foil pattern and burnt or discolored components.
4) When troubleshooting, Refer to 10-2, 10-3 and 10-4.

4. How to replace batteries

Weak batteries may cause the remote controller malfunction.
In this case, replace the batteries to operate the remote controller normally.

① Remove the front lid and insert batteries. Then reattach the front lid.

② Press RESET button with a fine-tipped object, and then use the remote controller.

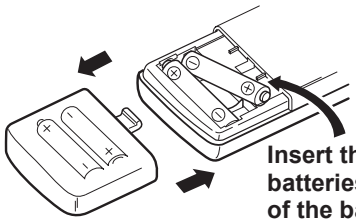

Insert the negative pole of the batteries first. Check if the polarity of the batteries is correct.

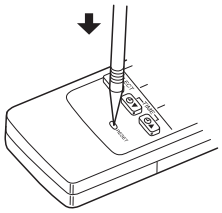

NOTE: 1. If RESET button is not pressed, the remote controller may not operate correctly.
2. This remote controller has a circuit to automatically reset the microcomputer when batteries are replaced. This function is equipped to prevent the microcomputer from malfunctioning due to the voltage drop caused by the battery replacement.
3. Do not use the leaking batteries.

10-2. FAILURE MODE RECALL FUNCTION

Outline of the function

This air conditioner can memorize the abnormal condition which has occurred once.

Even though LED indication listed on the troubleshooting check table (10-4.) disappears, the memorized failure details can be recalled.

1. Flow chart of failure mode recall function for the indoor/outdoor unit

Operational procedure

The cause of abnormality cannot be found because the abnormality does not recur.

Setting up the failure mode recall function

Turn ON the power supply.
<Preparation of the remote controller>
① While pressing OPERATION SELECT button and TOO COOL button on the remote controller at the same time, press RESET button.
② First, release RESET button.
Hold down the other 2 buttons for another 3 seconds. Make sure that the indicators on the LCD screen shown in the right figure are all displayed. Then release the buttons.

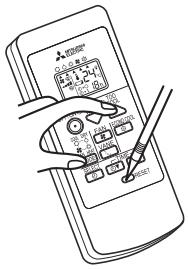

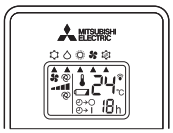

Press OFF/ON (stop/operate) button of the remote controller (the set temperature is displayed) with the remote controller headed towards the indoor unit. *1

*1 Regardless of normal or abnormal condition, a short beep is emitted once the signal is received.

Does left lamp of OPERATION INDICATOR lamp on the indoor unit blink at the interval of 0.5 seconds?
Blinks: Either indoor or outdoor unit is abnormal.
Beep is emitted at the same timing as the blinking of left lamp (**HR25/35/42/50**) or upper lamp (**HR60/71**) of OPERATION INDICATOR lamp. *2

No (OFF) → Indoor unit is normal.
But the outdoor unit might be abnormal because there are some abnormalities that cannot be recalled with this way.
Check if outdoor unit is abnormal according to the detailed outdoor unit failure mode recall function.

NOTE: It takes up to 1 minute to indicate the outdoor unit abnormality. Even if the OPERATION INDICATOR lamp is not lit, keep checking at least 1 minute or longer.

Yes (Blinks)

Judgment of indoor/outdoor abnormality

Before blinking, does left lamp (**HR25/35/42/50**) or upper lamp (**HR60/71**) of OPERATION INDICATOR lamp stay ON for 3 seconds?
Stays ON for 3 seconds (without beep):
The outdoor unit is abnormal.

Yes → The outdoor unit is abnormal.
Check the blinking pattern, and identify the abnormal point by referring to the table of outdoor unit failure mode recall function. (Refer to outdoor unit service manual.)
Make sure to check at least 2 consecutive blinking cycles. *3

No → The indoor unit is abnormal.
Check the blinking pattern, and identify the abnormal point by referring to the table of indoor unit failure mode recall function. (Refer to 10-2.2)
Make sure to check at least 2 consecutive blinking cycles. *2

Releasing the failure mode recall function

Release the failure mode recall function by the following procedures.
Turn OFF the power supply and turn it ON again.
Press RESET button of the remote controller.

Repair the failure parts.

Deleting the memorized abnormal condition

① After repairing the unit, recall the failure mode again according to "Setting up the failure mode recall function" mentioned above.
② Press OFF/ON (stop/operate) button of the remote controller (the set temperature is displayed) with the remote controller headed towards the indoor unit.
③ Press the emergency operation switch so that the memorized abnormal condition is deleted.
④ Release the failure mode recall function according to "Releasing the failure mode recall function" mentioned above.

NOTE: 1. Make sure to release the failure mode recall function after it is set up, otherwise the unit cannot operate properly.
2. If the abnormal condition is not deleted from the memory, the last abnormal condition is kept memorized.

*2. Blinking pattern when the indoor unit is abnormal:

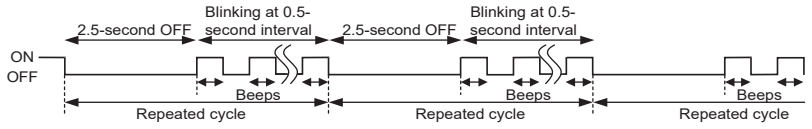

*3. Blinking pattern when the outdoor unit is abnormal:

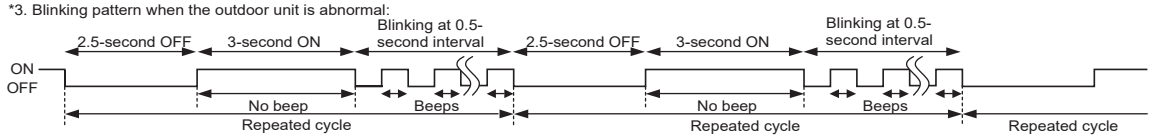

2. Table of indoor unit failure mode recall function

Left/Upper lamp of OPERATION INDICATOR lamp *1	Abnormal point (Failure mode)	Condition	Remedy
Not lit	Normal	—	—
1-time blink every 0.5-second	Room temperature thermistor	The room temperature thermistor short or open circuit is detected every 8 seconds during operation.	Refer to the characteristics of the room temperature thermistor (10-7.).
2-time blink 2.5-second OFF	Indoor coil thermistor	The indoor coil thermistor short or open circuit is detected every 8 seconds during operation.	Refer to the characteristics of the main indoor coil thermistor, the sub indoor coil thermistor (10-7.).
3-time blink 2.5-second OFF	Serial signal	The serial signal from outdoor unit is not received for a maximum of 6 minutes.	Refer to 10-6.Ⓓ "How to check miswiring and serial signal error".
11-time blink 2.5-second OFF	Indoor fan motor	The rotational frequency feedback signal is not emitted for the 12 seconds after the indoor fan is operated.	Refer to 10-6.Ⓐ "Check of indoor fan motor".
12-time blink 2.5-second OFF	Indoor control system	It cannot properly read data in the nonvolatile memory of the indoor electronic control P.C. board.	Replace the indoor electronic control P.C. board.

*1 Left lamp: HR25/35/42/50VF
Upper lamp: HR60/71VF

NOTE: Blinking patterns of this mode differ from the ones of TROUBLESHOOTING CHECK TABLE (10-4.).

10-3. INSTRUCTION OF TROUBLESHOOTING

1. Check of the unit

*1 "Test Run operation" means the operation within 30 minutes after the emergency operation switch is pressed.

*2 There is possibility that diesel explosion may occur due to the air mixed in the refrigerant circuit.
First, ensure that there are no leakage points on the valves, flare connections, etc. that allow the air to flow into the refrigerant circuit, or no blockage points (e.g. clogged or closed valves) in the refrigerant circuit that cause an increase in pressure.
If there is no abnormal point like above and the system operates cooling and heating modes normally, the indoor thermistor might have a problem, resulting in false detection.
Check both the indoor coil thermistor and the room temperature thermistor, and replace faulty thermistor(s), if any.
NOTE: Do not start the operation again without repair to prevent hazards.

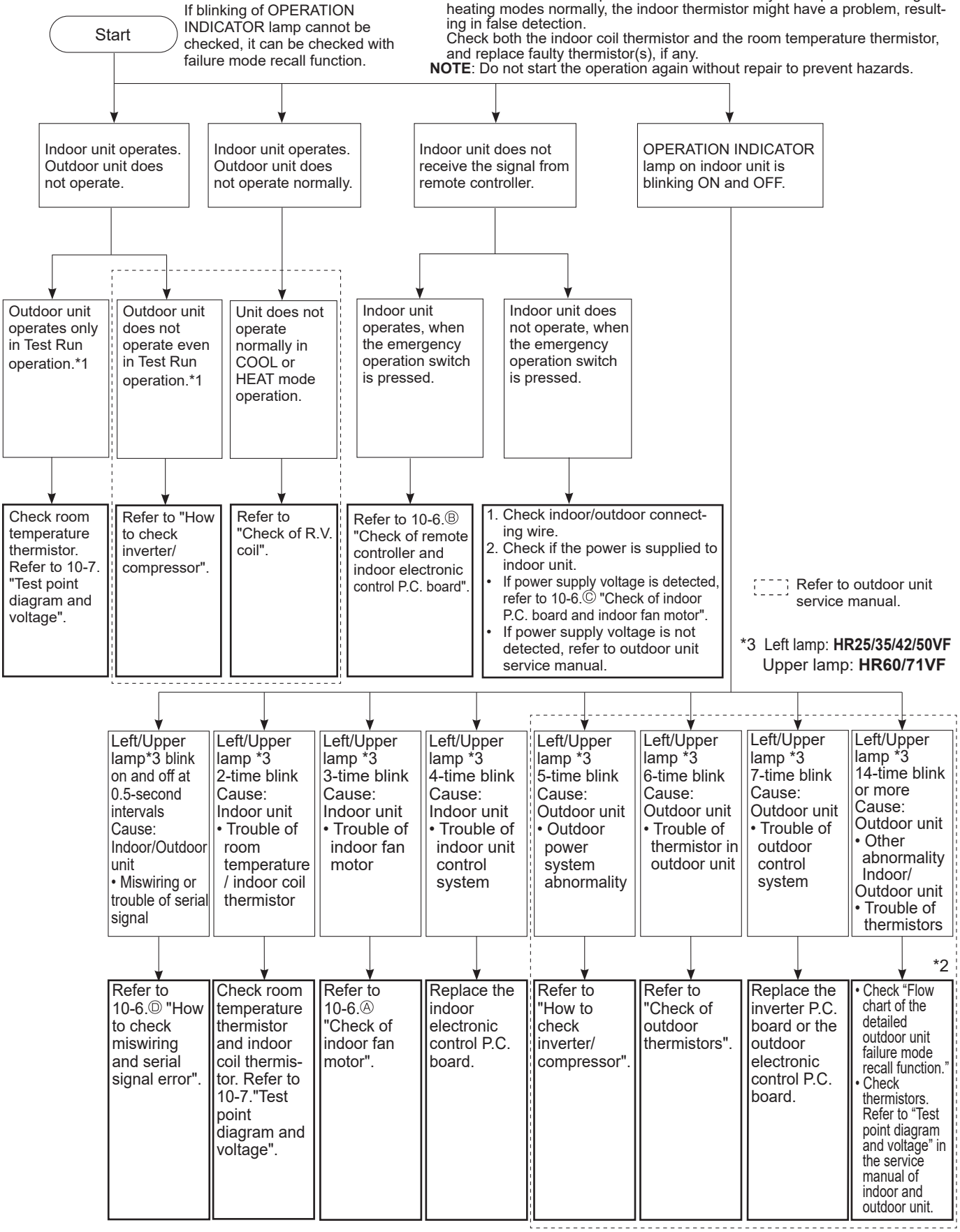

2. Check of Wi-Fi interface (MSZ-HR·VFK)

Follow the procedure below if the air conditioner cannot be monitored or controlled with a device such as a smartphone.

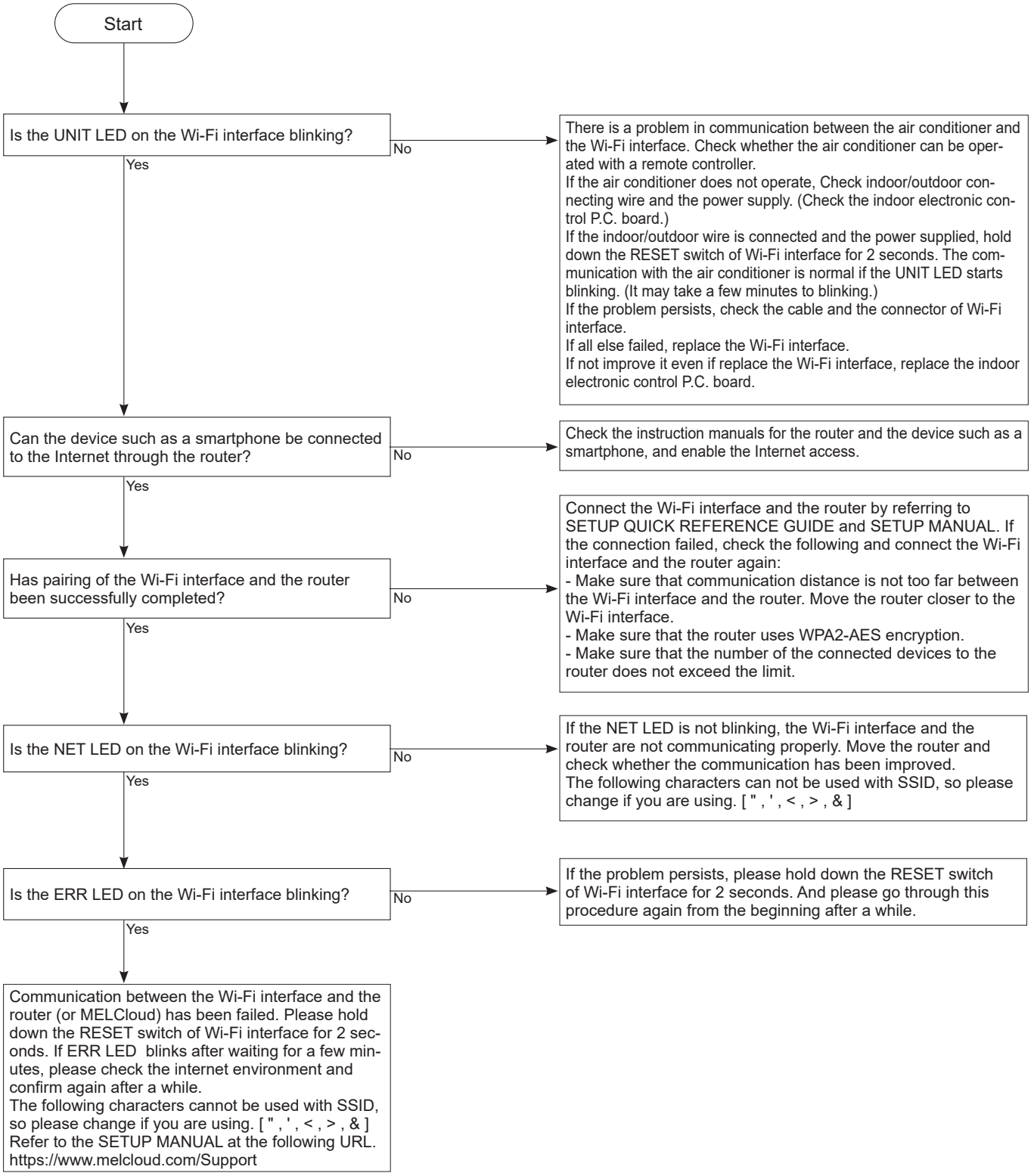

10-4. TROUBLESHOOTING CHECK TABLE

Before taking measures, make sure that the symptom reappears for accurate troubleshooting.
When the indoor unit has started operation and detected an abnormality of the following condition (the first detection after the power ON), the indoor fan motor turns OFF and OPERATION INDICATOR lamp blinks.

HR25/35/42/50VF
OPERATION INDICATOR

HR60/71VF
OPERATION INDICATOR

● Lit
☼ Blinking
○ Not lit

No.	Abnormal point	Operation indicator lamp	Symptom	Condition	Remedy
1	Miswiring or serial signal	Left/Upper lamp blinks. *1 0.5-second ON 0.5-second OFF	Indoor unit and outdoor unit do not operate.	The serial signal from the outdoor unit is not received for 6 minutes.	• Refer to 10-6. Ⓓ "How to check miswiring and serial signal error".
2	Indoor coil thermistor Room temperature thermistor	Left/Upper lamp blinks. *1 2-time blink 2.5-second OFF		The indoor coil or the room temperature thermistor is short or open circuit.	• Refer to the characteristics of indoor coil thermistor, and the room temperature thermistor (10-7.).
3	Indoor fan motor	Left/Upper lamp blinks. *1 3-time blink 2.5-second OFF		The rotational frequency feedback signal is not emitted during the indoor fan operation.	• Refer to 10-6. Ⓐ "Check of indoor fan motor".
4	Indoor control system	Left/Upper lamp blinks. *1 4-time blink 2.5-second OFF		It cannot properly read data in the nonvolatile memory of the indoor electronic control P.C. board.	• Replace the indoor electronic control P.C. board.
5	Outdoor power system	Left/Upper lamp blinks. *1 5-time blink 2.5-second OFF		It consecutively occurs 3 times that the compressor stops for overcurrent protection or startup failure protection within 1 minute after startup.	• Refer to "How to check of inverter/compressor". Refer to outdoor unit service manual. • Check the stop valve.
6	Outdoor thermistors	Left/Upper lamp blinks. *1 6-time blink 2.5-second OFF		The outdoor thermistors short or open circuit during the compressor operation.	• Refer to "Check of outdoor thermistor". Refer to outdoor unit service manual.
7	Outdoor control system	Left/Upper lamp blinks. *1 7-time blink 2.5-second OFF		It cannot properly read data in the nonvolatile memory of the inverter P.C. board or the outdoor electronic control P.C. board.	• Replace the inverter P.C. board or the outdoor electronic control P.C. board. Refer to outdoor unit service manual.
8	Other abnormality *2	Left/Upper lamp blinks. *1 14-time blink or more 2.5-second OFF		An abnormality other than the above is detected. An abnormality of the indoor thermistors, the defrost thermistor or ambient temperature thermistor is detected.	• Check the stop valve. • Check the 4-way valve. • Check the abnormality in detail using the failure mode recall function for outdoor unit. • Refer to TEST POINT DIAGRAM AND VOLTAGE" on the service manual of indoor and outdoor unit for the characteristics of the thermistors. (Do not start the operation again without repair to prevent hazards.)
9	Outdoor control system	Left/Upper lamp lights up ●	Outdoor unit does not operate	It cannot properly read data in the nonvolatile memory of the inverter P.C. board.	• Check the blinking pattern of the LED on the inverter P.C. board.

*1 Left lamp: **HR25/35/42/50VF**
Upper lamp: **HR60/71VF**
*2 Refer to *2 on 10-3. INSTRUCTION OF TROUBLESHOOTING.

OPERATION INDICATOR

HR25/35/42/50 **HR60/71**

● Lit
☼ Blinking
○ Not lit

No.	Abnormal point	Operation indicator lamp	Symptom	Condition	Remedy
1	**MXZ type** Operation mode setting	Left/Upper lamp lights and right lamp blinks. *1 2.5-second OFF	Outdoor unit operates but indoor unit does not operate.	The operation mode of the each indoor unit is differently set to COOL (includes DRY, FAN) and HEAT at the same time, the operation mode of the indoor unit that has operated at first has the priority.	• Unify the operation mode. Refer to outdoor unit service manual.

*1 Left lamp: **HR25/35/42/50**
Upper lamp: **HR60/71**

10-5. TROUBLESHOOTING CRITERION OF MAIN PARTS

Part name	Check method and criterion	Figure
Room temperature thermistor (RT11) Indoor coil thermistor (RT12, RT13)	Measure the resistance with a multimeter. Refer to 10-7. "Test point diagram and voltage", "Indoor electronic control P.C. board", for the chart of thermistor.	
Indoor fan motor (MF)	Check 10-6.Ⓐ "Check of indoor fan motor".	
Vane motor (MV)	Measure the resistance between the terminals with a multimeter. (Temperature: 10 - 30°C) [illegible]	**<HR25/35/42/50>** 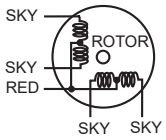 **<HR60/71>** 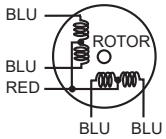

	Color of the lead wire	Normal
HR25/35/42/50	RED-SKY*	262 - 328 Ω
HR60/71	RED-BLU	

*SKY = SKY BLUE

10-6. TROUBLESHOOTING FLOW

Ⓐ Check of indoor fan motor

HR25/35/42/50

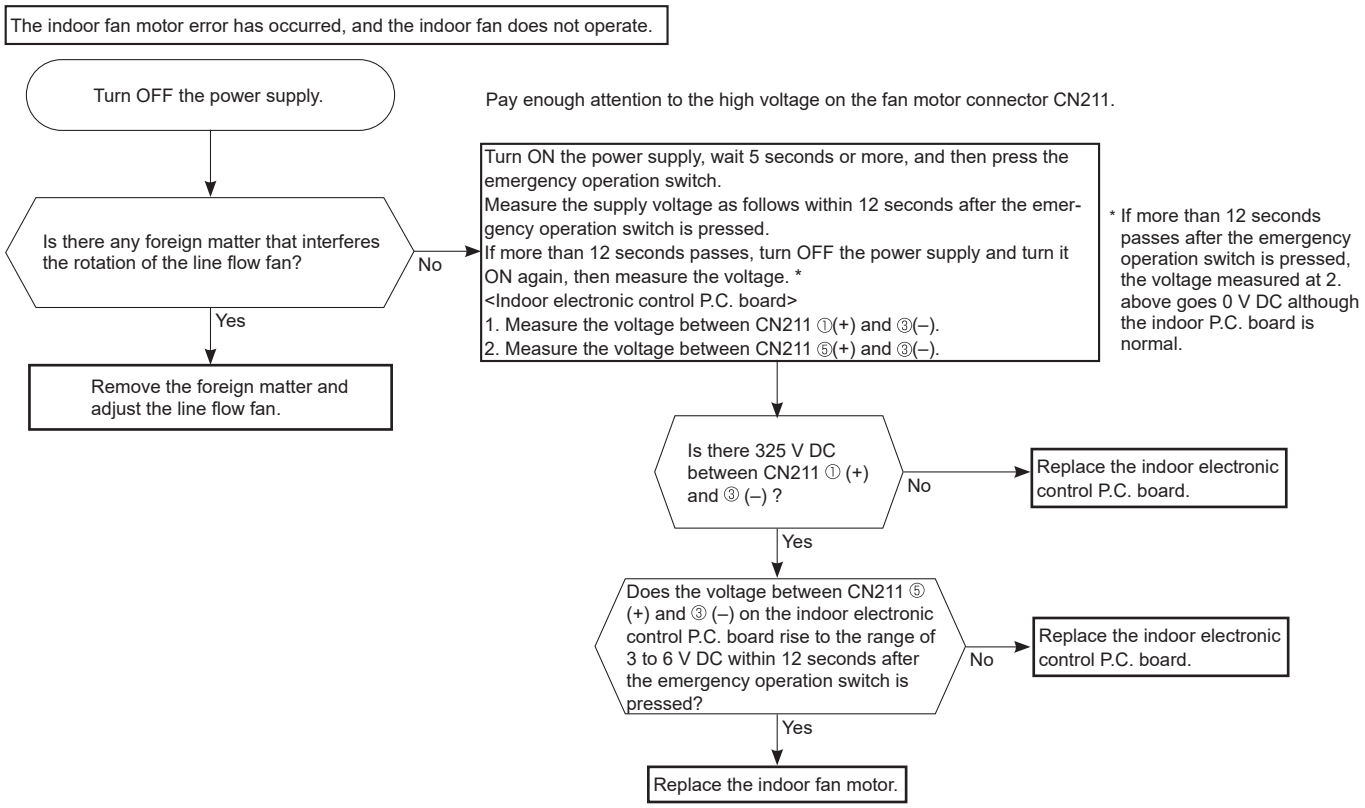

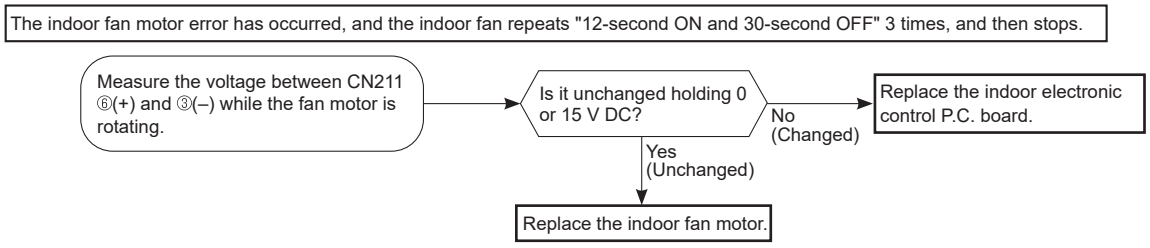

HR60/71

The indoor fan motor error has occurred, and the indoor fan does not operate.

Pay enough attention to the high voltage on the fan motor connector CN211.

Turn OFF the power supply.

Is there any foreign matter that interferes the rotation of the line flow fan?

- Yes → Remove the foreign matter and adjust the line flow fan.
- No → Turn ON the power supply, wait 5 seconds or more, and then press the emergency operation switch.
  Measure the supply voltage as follows within 12 seconds after the emergency operation switch is pressed.
  If more than 12 seconds passes, turn OFF the power supply and turn it ON again, then measure the voltage. *
  <Indoor power P.C. board>
  1. Measure the voltage between CN211 ①(+) and ③(–).
  2. Measure the voltage between CN211 ⑤(+) and ③(–).

* If more than 12 seconds passes after the emergency operation switch is pressed, the voltage measured at 2. above goes 0 V DC although the indoor P.C. board is normal.

Is there 325 V DC between CN211 ① (+) and ③ (–) ?

- No → Replace the indoor power P.C. board.
- Yes → Does the voltage between CN211 ⑤ (+) and ③ (–) on the indoor power P.C. board rise to the range of 3 to 6 V DC within 12 seconds after the emergency operation switch is pressed?
  - No → Replace the indoor power P.C. board.
  - Yes → Replace the indoor fan motor.

The indoor fan motor error has occurred, and the indoor fan repeats "12-second ON and 30-second OFF" 3 times, and then stops.

Measure the voltage between CN211 ⑥(+) and ③(–) while the fan motor is rotating.

Is it unchanged holding 0 or 15 V DC?

- No (Changed) → Replace the indoor power P.C. board.
- Yes (Unchanged) → Replace the indoor fan motor.

Ⓑ Check of remote controller and indoor electronic control P.C. board

Check if the remote controller is exclusive for this air conditioner.

Press OFF/ON (stop/operate) button on the remote controller.

Is LCD display on the remote controller visible?

- No (Not clear) → Replace the batteries. (Refer to 10-1.4.)
- Yes → Remove the batteries, then set them back and press RESET button. (Refer to 10-1.4.) Check if the unit operates with the remote controller.

Does the unit operate with the remote controller?

- Yes → OK
- No → Turn ON a radio to AM and press OFF/ON (stop/operate) button on the remote controller. *1

Is noise heard from radio?

- No → Replace the remote controller.
- Yes → Are there any fluorescent lights of inverter or rapid-start type within the range of 1 m? *2
  - Yes → •Reinstall the unit away from lights. •Attach a filter on receiving part.
  - No → Replace the indoor electronic control P.C. board. (Including the receiver)

*1 Look at the image of the signal transmitting section of the remote controller through the monitor of a digital camera or a camera phone. It is normal if the LED of the signal transmitting section lights up when the OFF/ON (stop/operate) button on the remote controller is pressed. However, it may be difficult to see the illuminated LED of the signal transmitting section with a smartphone camera.

*2 If the inverter fluorescent light is turned on when the room is cool, the unit may have difficulty receiving the signal from the remote controller or may not be able to operate with it; if the inverter fluorescent light is turned on when the room is warm, the unit may be able to operate with the remote controller.

Ⓒ Check of indoor P.C. board and indoor fan motor

HR25/35/42/50

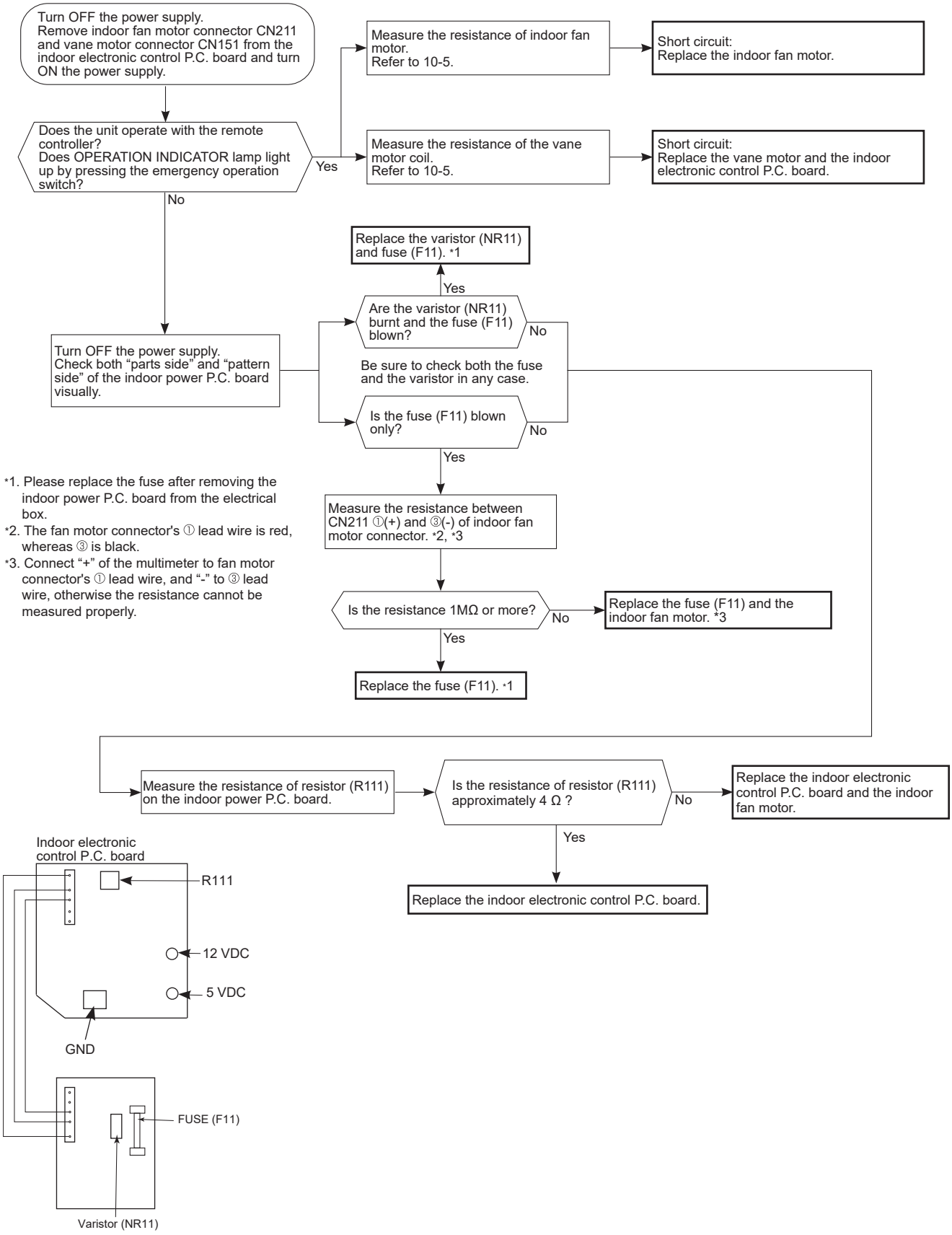

HR60/71

Turn OFF the power supply.
Remove indoor fan motor connector CN211 from indoor power P.C. board and vane motor connector CN151 from the indoor electronic control P.C. board and turn ON the power supply.

Does the unit operate with the remote controller?
Does OPERATION INDICATOR lamp light up by pressing the emergency operation switch?

Yes → Measure the resistance of indoor fan motor. Refer to 10-5. → Short circuit: Replace the indoor fan motor.

Yes → Measure the resistance of the vane motor coil. Refer to 10-5. → Short circuit: Replace the vane motor and the indoor electronic control P.C. board.

No → Turn OFF the power supply. Check both "parts side" and "pattern side" of the indoor power P.C. board visually.

Be sure to check both the fuse and the varistor in any case.

Is the varistor (NR11) burnt and the fuse (F11) blown?
- Yes → Replace the varistor (NR11) and fuse (F11). *3
- No → With a multimeter, check the continuity between the connector CN201 ② on the indoor power P.C. board and S2 on the terminal block.

Is electricity conducted? (The resistance is 0 Ω .)
- Yes → Measure the resistance of reactor (L111) or (L112) on the indoor power P.C. board.
- No → Replace the terminal block assembly.

Is the fuse (F11) blown only?
- Yes → Measure the resistance between CN211 ①(+) and ③(-) of indoor fan motor connector. *1, *2
- No → With a multimeter, check the continuity between the connector CN201 ② on the indoor power P.C. board and S2 on the terminal block.

Is the resistance 1MΩ or more?
- No → Replace the fuse (F11) and the indoor fan motor. *3
- Yes → Replace the fuse (F11). *3

*1. The fan motor connector's ① lead wire is red, whereas ③ is black.
*2. Connect "+" of the multimeter to fan motor connector's ① lead wire, and "-" to ③ lead wire, otherwise the resistance cannot be measured properly.
*3. Please replace the fuse after removing the indoor power P.C. board from the electrical box.

Is the resistance of reactor (L111) or (L112) approximately 4.3 Ω ?
- No → Replace the indoor power P.C. board and the indoor fan motor.
- Yes → Is there approximately 5 VDC between 5 V (+) and GND (-) of the indoor electronic control P.C. board? Is there approximately 9 V to 13 VDC between 12 V (+) and GND (-) of the indoor electronic control P.C. board?

Is there approximately 5 VDC between 5 V (+) and GND (-) of the indoor electronic control P.C. board? Is there approximately 9 V to 13 VDC between 12 V (+) and GND (-) of the indoor electronic control P.C. board?
- Yes → Replace the indoor fan motor.
- No → Is the connector CN10A on the indoor electronic control P.C. board or lead wires disconnected?

Is the connector CN10A on the indoor electronic control P.C. board or lead wires disconnected?
- Yes → Connect the connector CN10A or repair disconnection.
- No → Replace the power P.C. board.

Indoor electronic control P.C. board

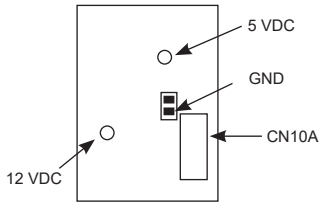

Indoor power P.C. board

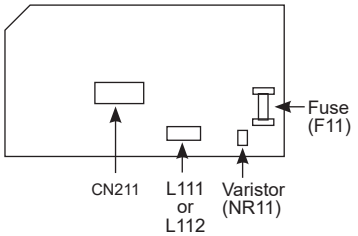

Ⓓ How to check miswiring and serial signal error

NOTE: Refer to the outdoor unit service manual.

HR25/35/42/50

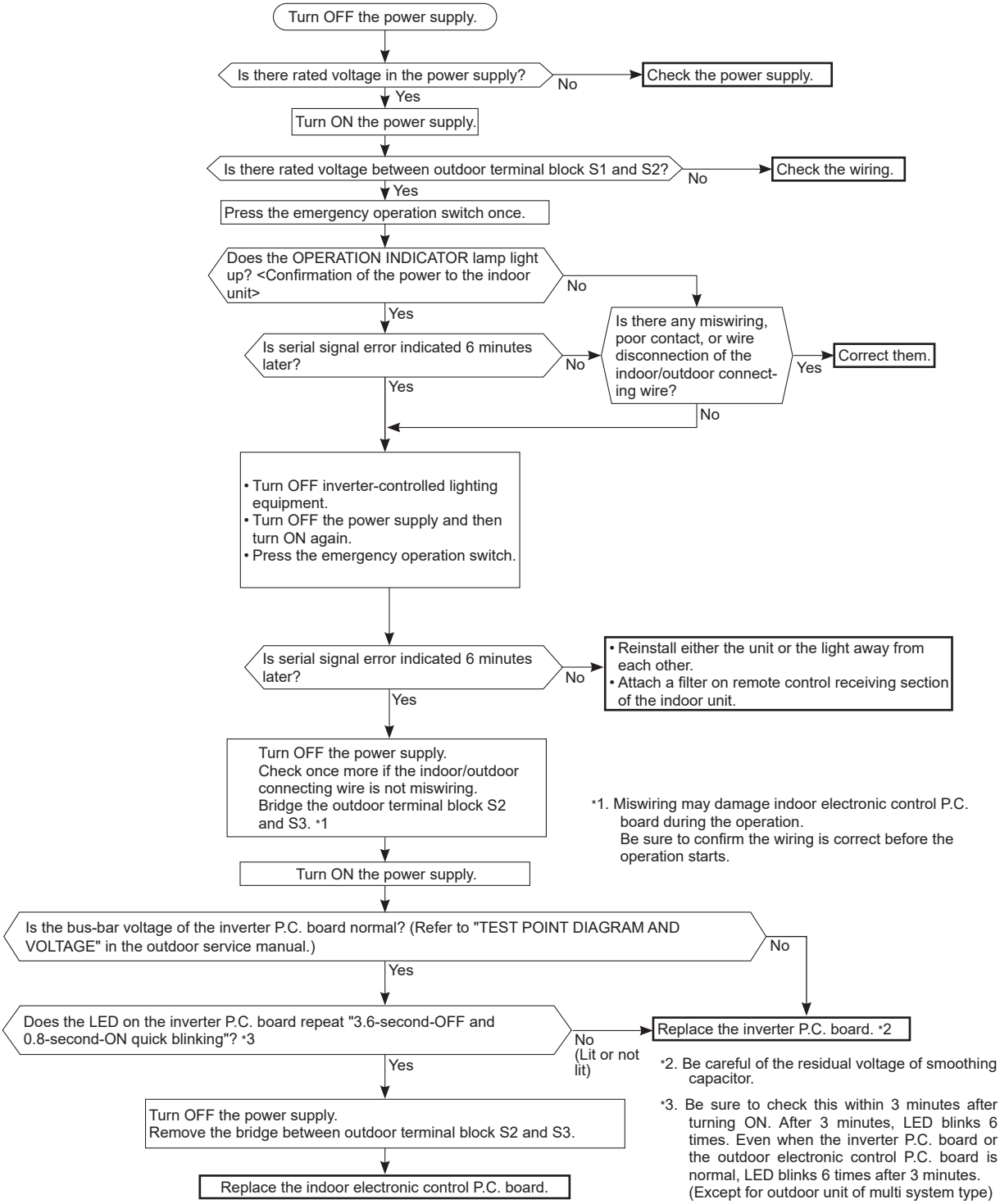

*1. Miswiring may damage indoor electronic control P.C. board during the operation.
Be sure to confirm the wiring is correct before the operation starts.

*2. Be careful of the residual voltage of smoothing capacitor.

*3. Be sure to check this within 3 minutes after turning ON. After 3 minutes, LED blinks 6 times. Even when the inverter P.C. board or the outdoor electronic control P.C. board is normal, LED blinks 6 times after 3 minutes. (Except for outdoor unit of multi system type)

HR60/71

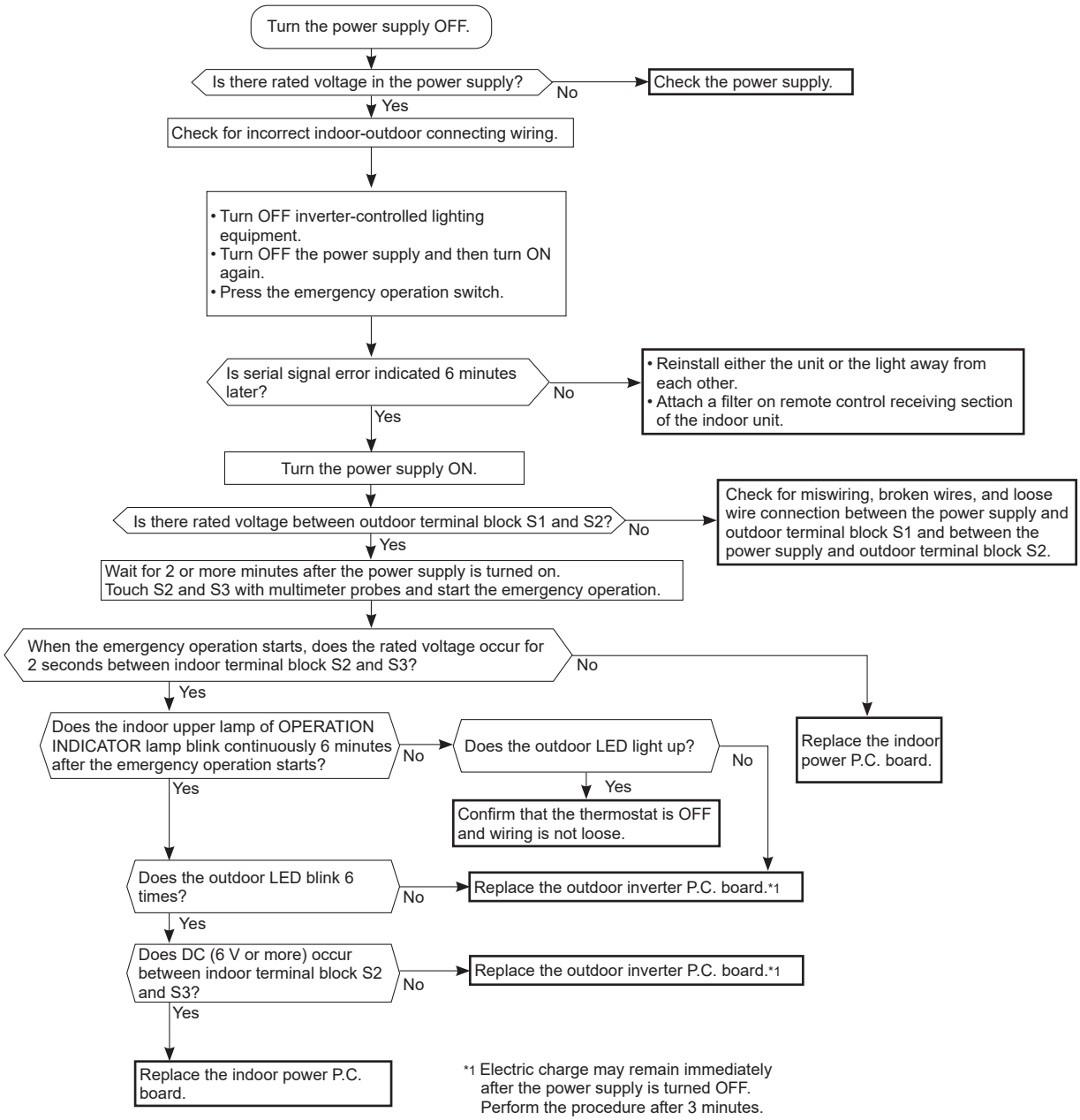
Turn the power supply OFF.
Is there rated voltage in the power supply?
No
Check the power supply.
Yes
Check for incorrect indoor-outdoor connecting wiring.
• Turn OFF inverter-controlled lighting equipment.
• Turn OFF the power supply and then turn ON again.
• Press the emergency operation switch.
Is serial signal error indicated 6 minutes later?
No
• Reinstall either the unit or the light away from each other.
• Attach a filter on remote control receiving section of the indoor unit.
Yes
Turn the power supply ON.
Is there rated voltage between outdoor terminal block S1 and S2?
No
Check for miswiring, broken wires, and loose wire connection between the power supply and outdoor terminal block S1 and between the power supply and outdoor terminal block S2.
Yes
Wait for 2 or more minutes after the power supply is turned on.
Touch S2 and S3 with multimeter probes and start the emergency operation.
When the emergency operation starts, does the rated voltage occur for 2 seconds between indoor terminal block S2 and S3?
No
Replace the indoor power P.C. board.
Yes
Does the indoor upper lamp of OPERATION INDICATOR lamp blink continuously 6 minutes after the emergency operation starts?
No
Does the outdoor LED light up?
No
Yes
Confirm that the thermostat is OFF and wiring is not loose.
Yes
Does the outdoor LED blink 6 times?
No
Replace the outdoor inverter P.C. board.*1
Yes
Does DC (6 V or more) occur between indoor terminal block S2 and S3?
No
Replace the outdoor inverter P.C. board.*1
Yes
Replace the indoor power P.C. board.
*1 Electric charge may remain immediately after the power supply is turned OFF. Perform the procedure after 3 minutes.

MXZ Type HR25/35/42/50

LED indication for communication status
Communication status is indicated by the LED.

Unit status
Blinking: Normal communication
Lit: Abnormal communication or not connected

Pattern 1 and 2 is repeatedly displayed alternately. Each pattern is displayed for 10 seconds.

NOTE: "Lit" in the table below does not indicate abnormal communication.

Outdoor control P.C. board

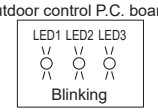

Pattern	LED 1	LED 2	LED 3
1	Unit A status	Unit B status	Lit
2	Unit C status	Unit D status	Not lit
3	Unit E status	———	Blinking

Turn OFF the power supply.

Is there rated voltage in the power supply?
- No → Check the power supply.
- Yes ↓

Turn ON the power supply.

Is there rated voltage between outdoor terminal block S1 and S2?
- No → Check the wiring.
- Yes ↓

Press the emergency operation switch once.

Does the upper lamp of OPERATION INDICATOR lamp on the indoor unit light up? <Confirmation of the power to the indoor unit>
- No → Is there any miswiring, poor contact, or wire disconnection of the indoor/outdoor connecting wire?
  - Yes → Correct them.
  - No ↓
- Yes ↓

Is serial signal error indicated 6 minutes later?
- No → Is there any miswiring, poor contact, or wire disconnection of the indoor/outdoor connecting wire?
- Yes ↓

- Turn OFF inverter-controlled lighting equipment.
- Turn OFF the power supply and then turn ON again.
- Press the emergency operation switch.

Is serial signal error indicated 6 minutes later?
- No →
  - Reinstall either the unit or the light away from each other.
  - Attach a filter on remote control receiving section of the indoor unit.
- Yes ↓

Turn OFF the power supply.
Check once more if the indoor/outdoor connecting wire is not miswiring.
Bridge the outdoor terminal block S2 and S3. *1

*1. Miswiring may damage indoor electronic control P.C. board during the operation.
Be sure to confirm the wiring is correct before the operation starts.

Turn ON the power supply.

Does the LED on the outdoor control P.C. board repeat "3.6-second-OFF and 0.8-second-ON quick blinking"?
- No → Replace the inverter P.C. board. *2
- Yes ↓

*2. Be careful of the residual voltage of smoothing capacitor.

Turn OFF the power supply. Remove the bridge between outdoor terminal block S2 and S3. Turn ON the power supply. Is there amplitude of 10 to 20 V DC between outdoor terminal block S2 and S3? <Confirmation of serial signal>
- No → Is there any error of the indoor/outdoor connecting wire, such as the damage of the wire, intermediate connection, poor contact to the terminal block?
  - Yes → Replace the indoor/outdoor connecting wire.
  - No ↓
- Yes ↓

Is there rated voltage between outdoor terminal block S1 and S2? <Confirmation of power voltage>
- No → Is there any error of the indoor/outdoor connecting wire, such as the damage of the wire, intermediate connection, poor contact to the terminal block?
- Yes ↓

Replace the Indoor electronic control P.C. board.

Be sure to release the failure-mode recall function after checking.

Ⓔ Electromagnetic noise enters into TV sets or radios

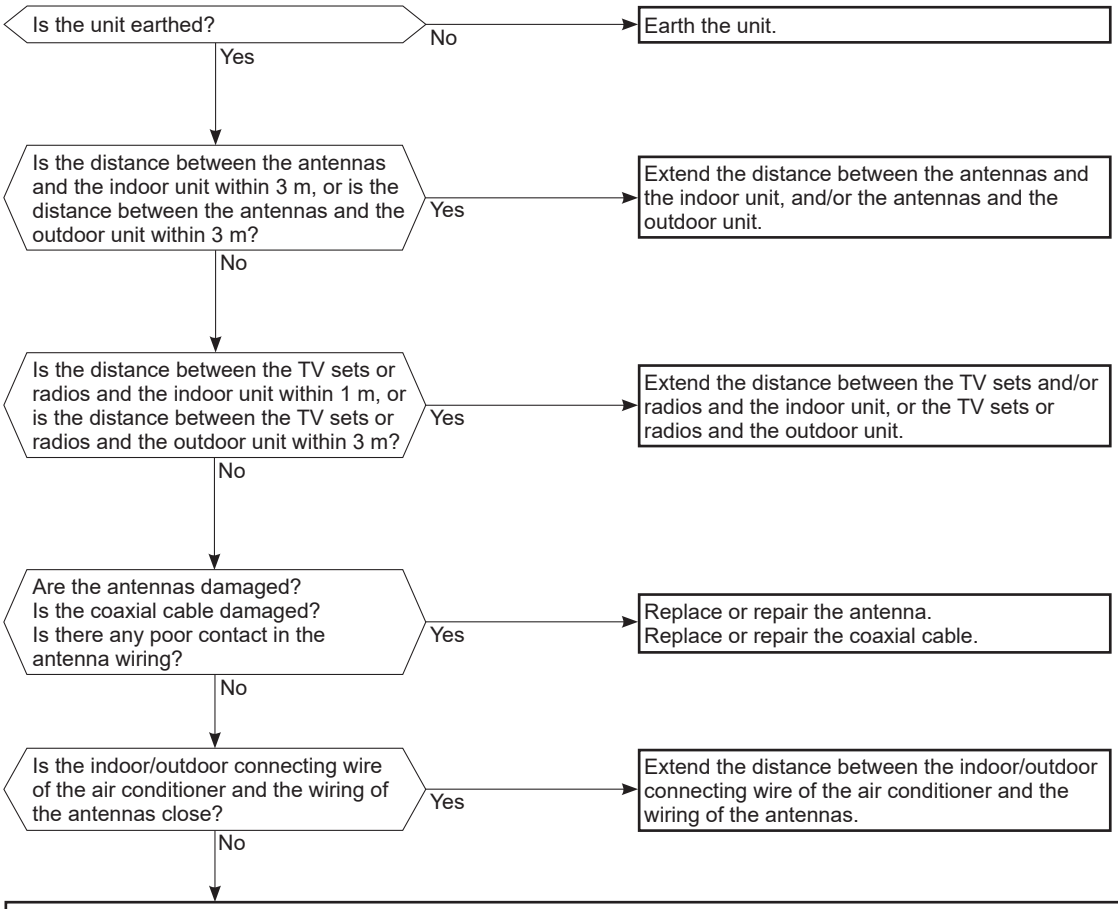

Even if all of the above conditions are fulfilled, the electromagnetic noise may enter, depending on the electric field strength or the installation condition (combination of specific conditions such as antennas or wiring).
Check the following before asking for service.

1. Devices affected by the electromagnetic noise
   TV sets, radios (FM/AM broadcast, shortwave)
2. Channel, frequency, broadcast station affected by the electromagnetic noise
3. Channel, frequency, broadcast station unaffected by the electromagnetic noise
4. Layout of:
   indoor/outdoor unit of the air conditioner, indoor/outdoor wiring, earth wire, antennas, wiring from antennas, receiver
5. Electric field intensity of the broadcast station affected by the electromagnetic noise
6. Presence or absence of amplifier such as booster
7. Operation condition of air conditioner when the electromagnetic noise enters in
   1) Turn OFF the power supply once, and then turn ON the power supply. In this situation, check for the electromagnetic noise.
   2) Within 3 minutes after turning ON the power supply, press OFF/ON (stop/operate) button on the remote controller for power ON, and check for the electromagnetic noise.
   3) After a short time (3 minutes later after turning ON), the outdoor unit starts running. During operation, check for the electromagnetic noise.
   4) Press OFF/ON (stop/operate) button on the remote controller for power OFF, when the outdoor unit stops but the indoor/outdoor communication still runs on. In this situation, check for the electromagnetic noise.

10-7. TEST POINT DIAGRAM AND VOLTAGE

MSZ-HR25VF MSZ-HR35VF MSZ-HR42VF MSZ-HR50VF

1. Indoor electronic control P.C. board, indoor terminal P.C. board and power monitor receiver SW P.C. board

Indoor electronic control P.C. board

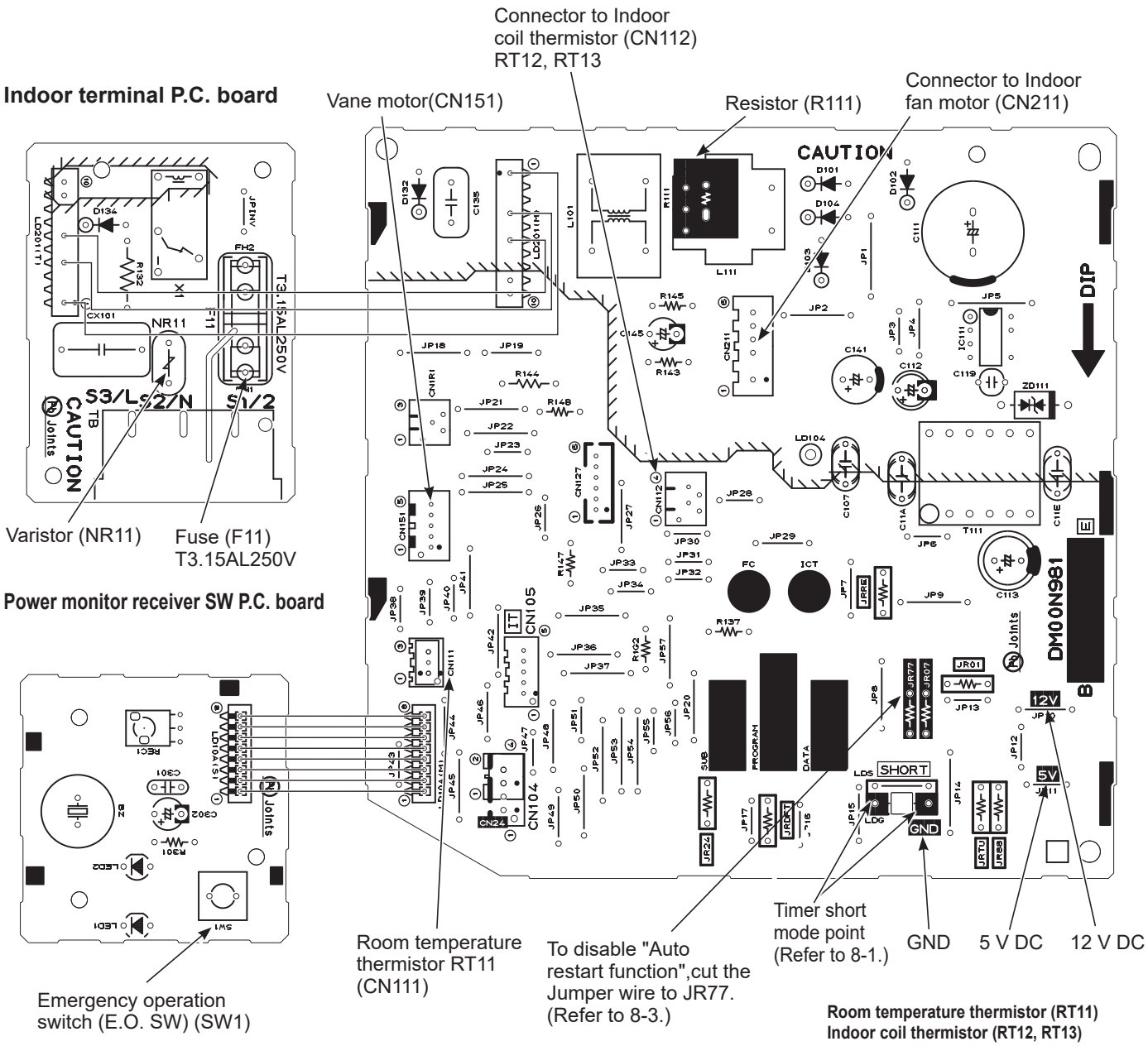

Room temperature thermistor (RT11)
Indoor coil thermistor (RT12, RT13)

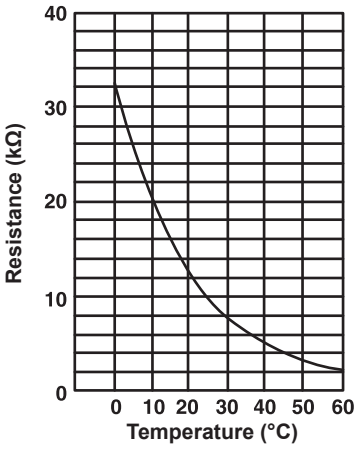

MSZ-HR25VFK MSZ-HR35VFK MSZ-HR42VFK MSZ-HR50VFK

1. Indoor electronic control P.C. board, indoor terminal P.C. board and power monitor receiver SW P.C. board

Indoor electronic control P.C. board

Indoor terminal P.C. board

Power monitor receiver SW P.C. board

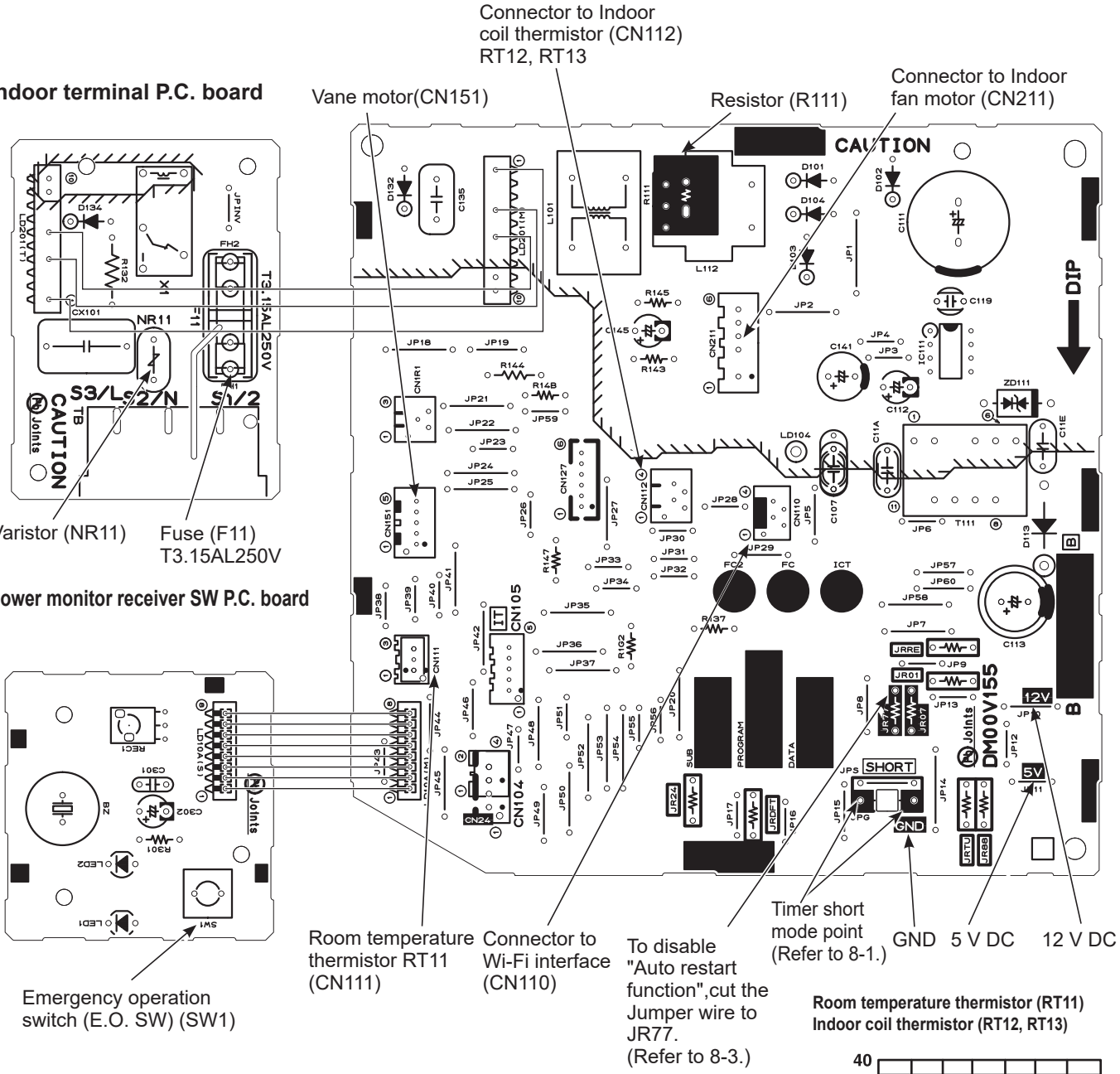

Room temperature thermistor (RT11)
Indoor coil thermistor (RT12, RT13)

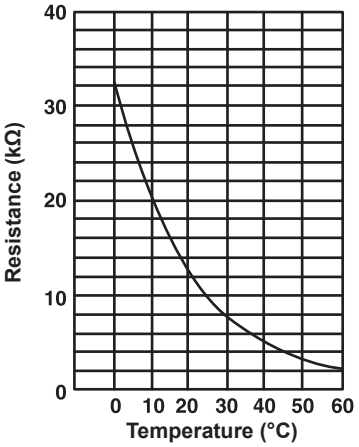

MSZ-HR60VF - E1, ER1, ET1, E2 MSZ-HR71VF - E1, ER1, ET1, E2

1. Indoor power P.C. board

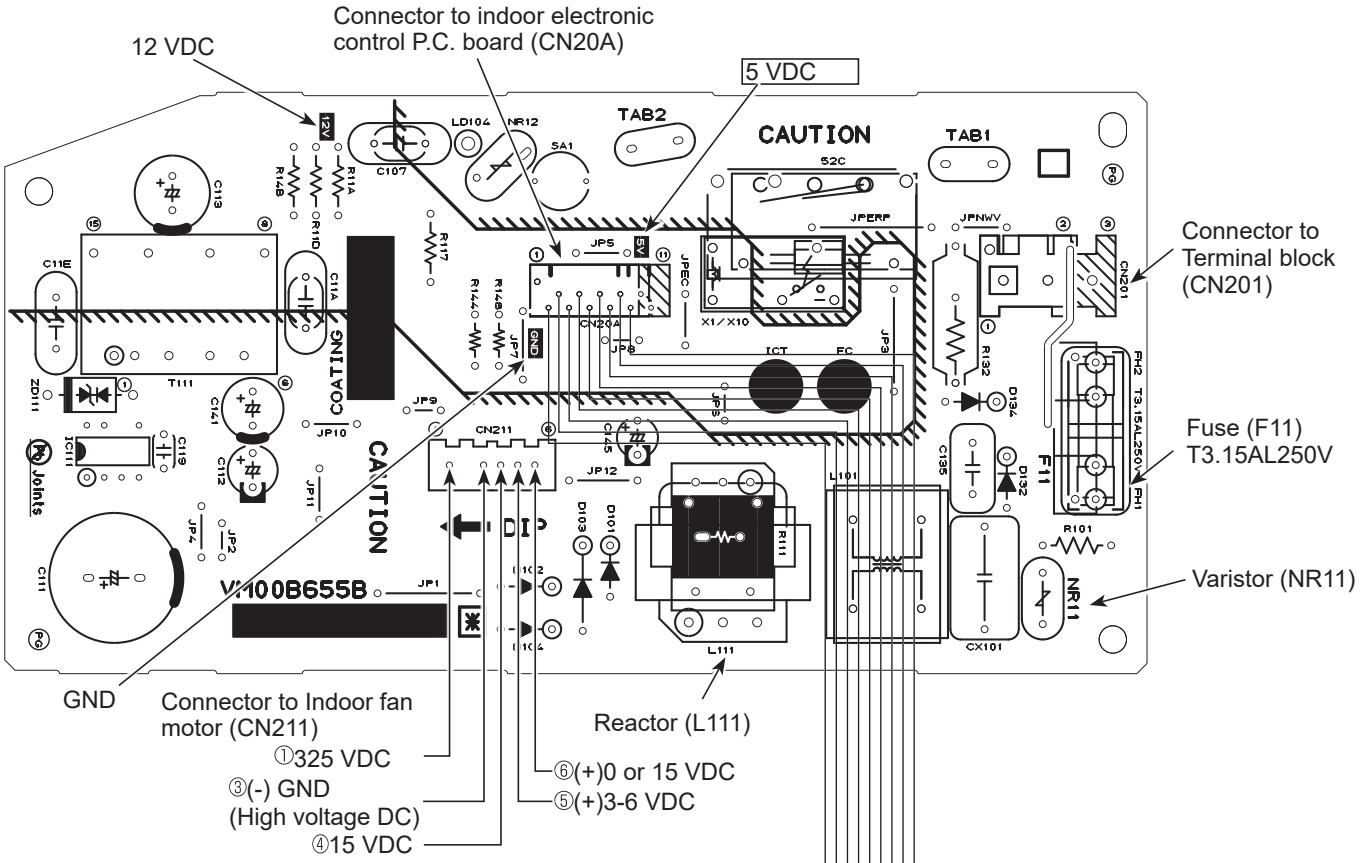

2. Indoor electronic control P.C. board

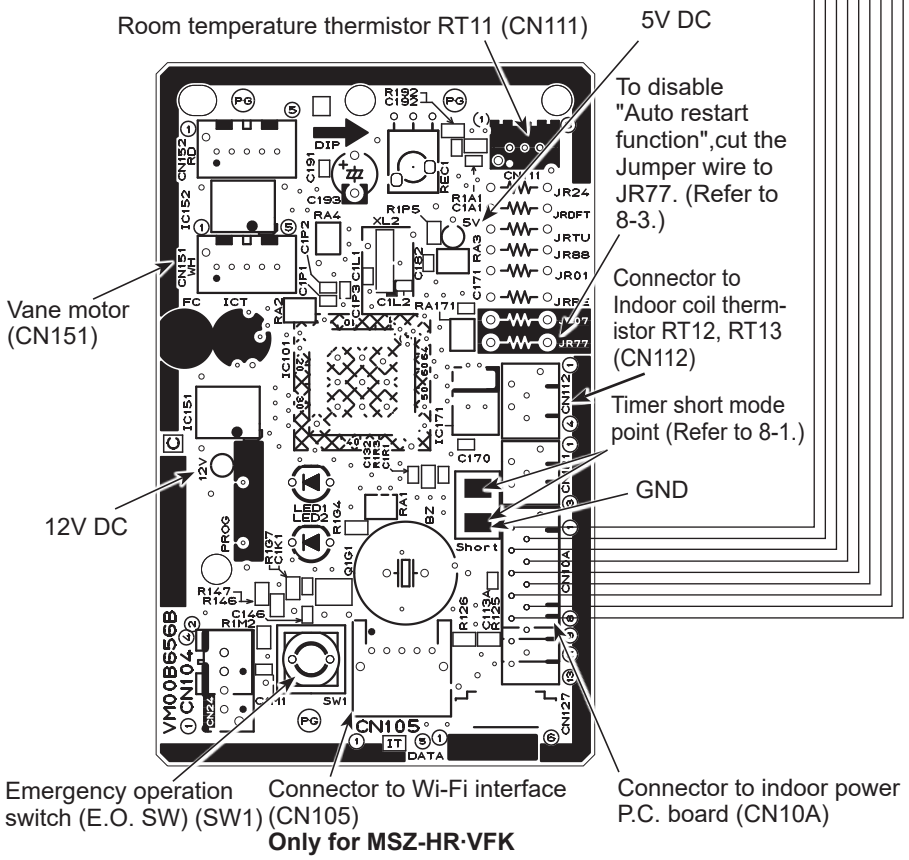

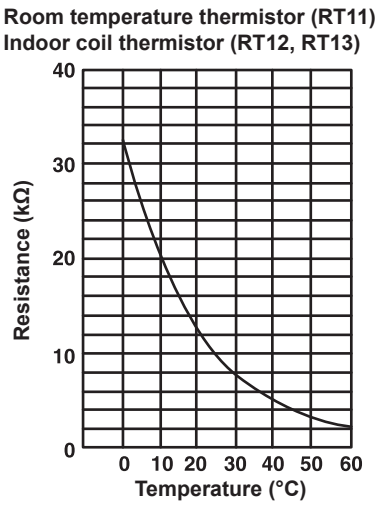

MSZ-HR60VF - ER2, ET2, E3 **MSZ-HR71VF -** ER2, ET2, E3
MSZ-HR60VFK- E1, ER1, ET1 **MSZ-HR71VFK-** E1, ER1, ET1

1. Indoor power P.C. board

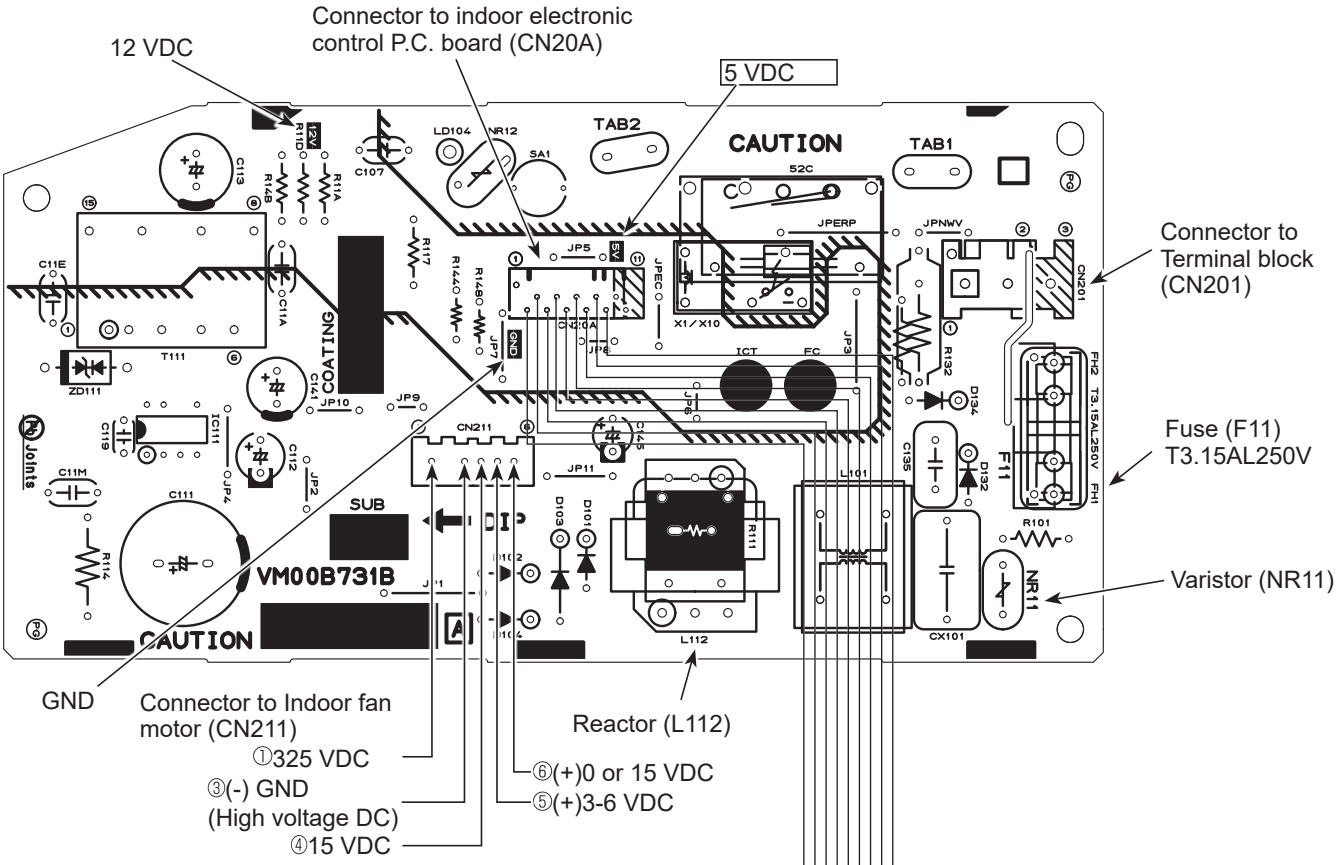

2. Indoor electronic control P.C. board

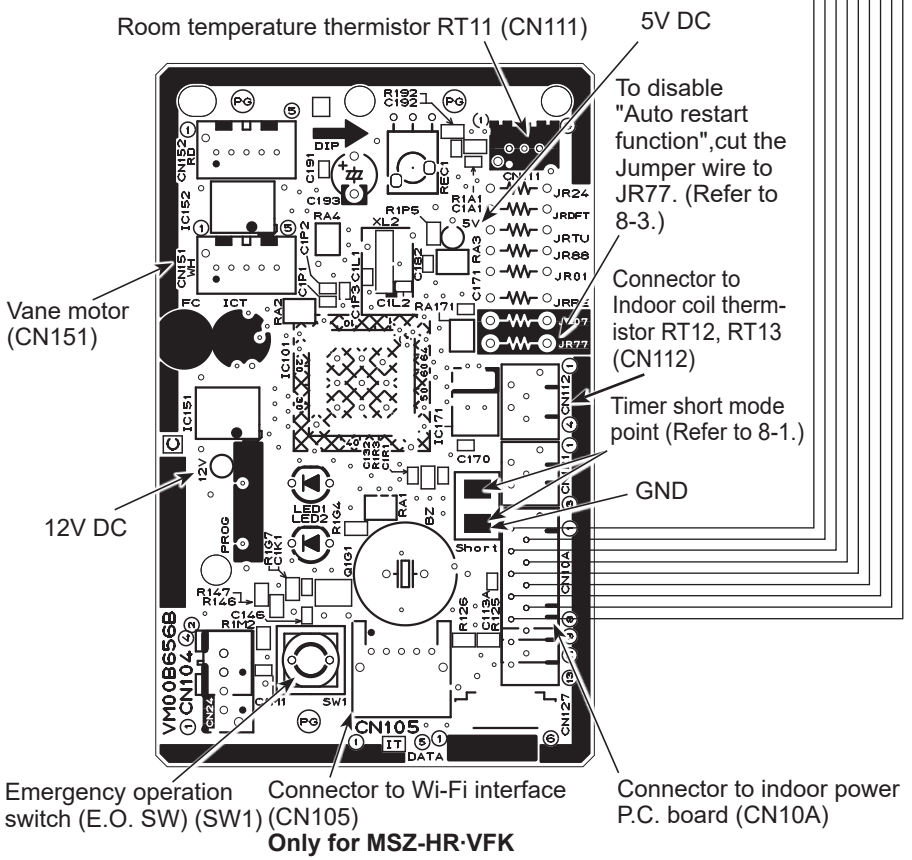

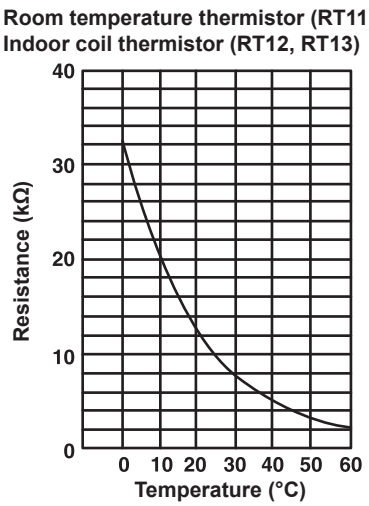

11 DISASSEMBLY INSTRUCTIONS

<Detaching method of the terminal with locking mechanism>

The terminal which has the locking mechanism can be detached as shown below.
There are 2 types of the terminal with locking mechanism.
The terminal without locking mechanism can be detached by pulling it out.
Check the shape of the terminal before detaching.

(1) Slide the sleeve and check if there is a locking lever or not.

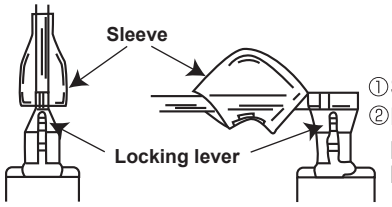

①Slide the sleeve.
②Pull the terminal while pushing the locking lever.

(2) The terminal with this connector shown below has the locking mechanism.

①Hold the sleeve, and pull out the terminal slowly.

11-1. MSZ-HR25VF MSZ-HR35VF MSZ-HR42VF MSZ-HR50VF

NOTE: Turn OFF the power supply before disassembly.

→: Indicates the visible parts in the photos/figures.
- - →: Indicates the invisible parts in the photos/figures.

OPERATING PROCEDURE	PHOTOS/FIGURES
1. Removing the panel (1) Remove the screw caps on the panel and remove the screws of the panel. (2) Pull the panel slightly toward you, and then remove the panel by pushing it upward.	**Photo 1** 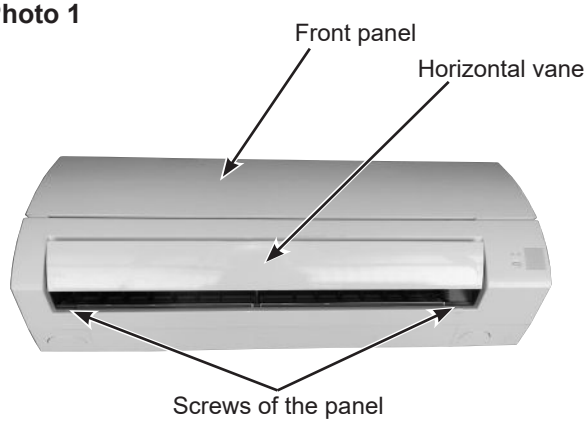

OPERATING PROCEDURE	PHOTOS/FIGURES

2. Removing the indoor terminal P.C. board, indoor electronic control P.C. board, and power monitor receiver SW P.C. board and the electrical box

<Removing the electrical box>

(1) Remove the panel. (Refer to section 1.)
Remove the corner box right .

(2) Remove the screw of the V.A. clamp.
Remove the V.A. clamp and the indoor/outdoor connecting wire.

(3) Remove the screws of the electrical cover and electrical cover.

(4) Remove the connector of the coil thermistor from the indoor electronic control P.C. board.
Remove the wires of the indoor coil thermistors from the water cover, and remove the tab of the earth wire.

(5) Remove the water cover.

(6) Remove the following connectors from the indoor electronic control P.C. board:
CN151 (Vane motor)
CN211 (Fan motor)

(7) Remove the upper catch of the electrical box, and pull out the electrical box.

NOTE:
To attach the electrical box, pass the wires connecting the indoor power monitor receiver SW P.C. board and the indoor electronic control P.C. board through A. Pass the lead wires of the fan motor through B as shown in the Photo 3.

<Removing the indoor terminal P.C. board, indoor electronic control P.C. board, and power monitor receiver SW P.C. board>

(8) Remove the screw of the terminal block and remove the earth wire connected to the electrical box from the indoor electronic control P.C. board.

(9) Remove the display P.C. board holder from the electrical box.

(10) Unhook the hooks of the the display P.C. board holder (Photo 4) and remove the power monitor receiver SW P.C. board.

(11) Remove the room temperature thermistor from the electrical box .
Remove the indoor terminal P.C. board and the indoor electronic control P.C board from the electrical box.

***1:** Remove the insulations when replace the indoor electric control P.C. board.

Photo 4

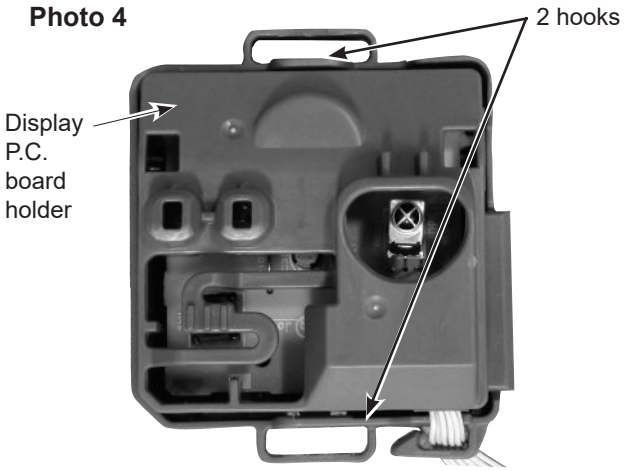

Photo 2

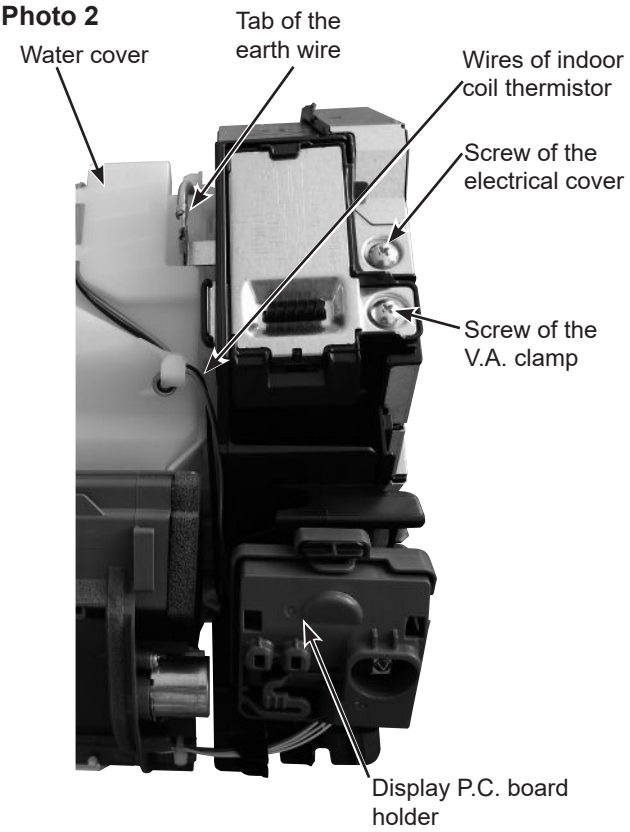

Photo 3

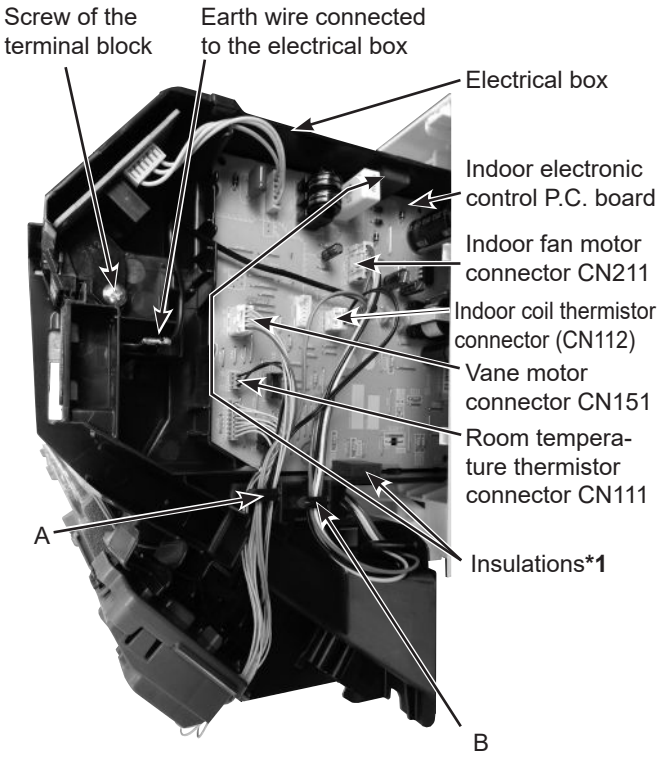

OPERATING PROCEDURE	PHOTOS/FIGURES
3. Removing the nozzle assembly and the vane motor **<Removing the nozzle assembly>** (1) Remove the panel (Refer to section 1.) and the corner box. (2) Remove the V.A. clamp, and then the indoor/outdoor connecting wire. (Refer to section 2.) (3) Remove the electrical cover. (Refer to section 2.) (4) Disconnect the following connectors on the electronic control P.C. board: CN151 (Vane motor) (5) Pull out the drain hose from the nozzle assembly and remove the nozzle assembly. **<Removing the vane motor>** (6) Cut the fixing band of the vane motor wire. (Photo 5) (7) Remove the screws of the vane motor and remove the vane motor. (Photo 6) (8) Disconnect the connector from the vane motor.	**Photo 5** 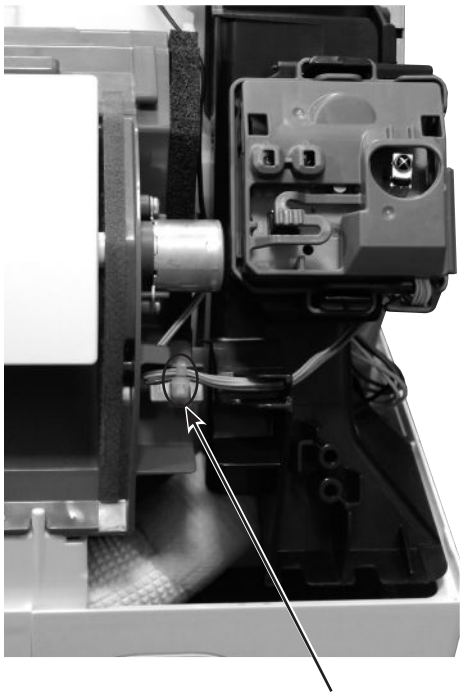 Fixing band of the vane motor wire **Photo 6** Screws of the vane motor

OPERATING PROCEDURE	PHOTOS/FIGURES

4. Removing the indoor fan motor, the indoor coil thermistor and the line flow fan

(1) Remove the panel. (Refer to section 1.)
Remove the corner box.
(2) Remove the electrical box and the nozzle assembly. (Refer to section 2,3.)
(3) Remove the screws fixing the motor bed.
(4) Loosen the screw fixing the line flow fan.
(5) Remove the motor bed together with the indoor fan motor and the motor band.
(6) Disconnect the lead wire of the fan motor from the motor band.
(7) Disengage the hooks of the motor band and remove the motor band. Pull out the indoor fan motor.
(8) Remove the indoor coil thermistor from the heat exchanger.
* Install the indoor coil thermistor in its former position when assembling it.
(9) Remove the screws fixing the left side of the heat exchanger.
(10) Lift the heat exchanger, and pull out the line flow fan to the lower-left.
* When attaching the line flow fan, screw the line flow fan so 4 mm gap is provided between the right end of the line flow fan and the right wall of the air passage of the box (Figure 1).

Figure 1

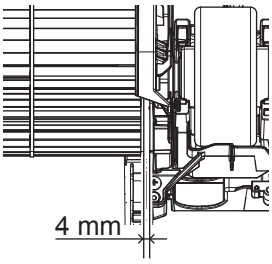

Photo 10

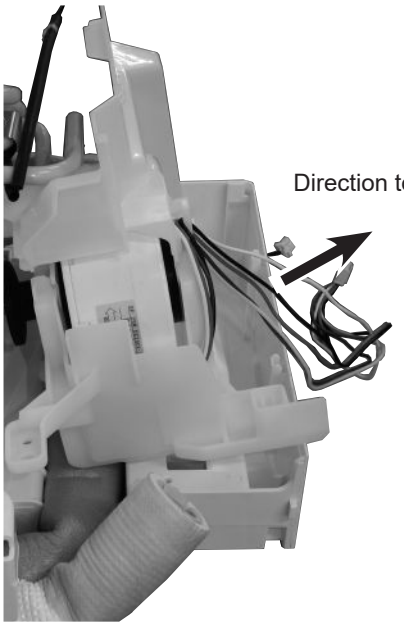

Photo 7

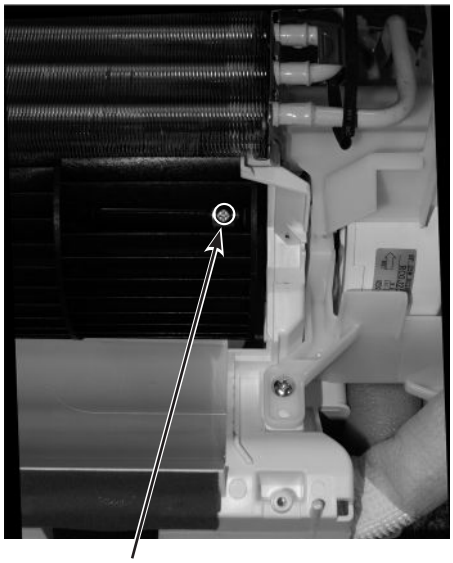

Photo 8

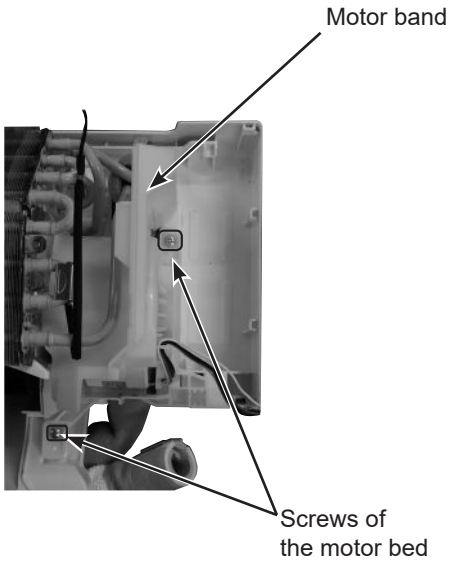

Photo 9

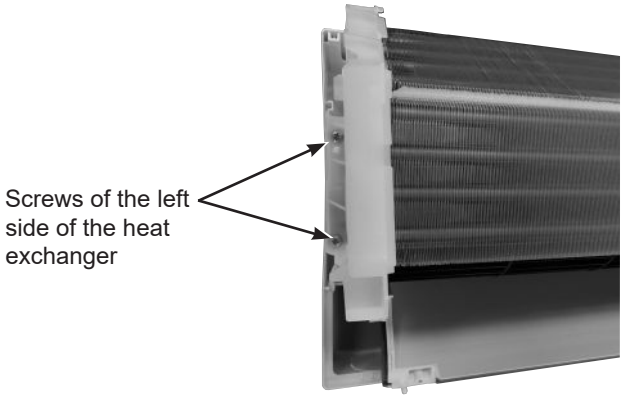

11-2. MSZ-HR25VFK MSZ-HR35VFK MSZ-HR42VFK MSZ-HR50VFK

NOTE: Turn OFF the power supply before disassembly.

OPERATING PROCEDURE	PHOTOS/FIGURES
1. Removing the panel (1) Remove the front panel. (2) Remove the screw caps of the panel. Remove the screws of the panel. (3) Remove the screw of the Wi-Fi cover on the upper right of the panel, and remove the Wi-Fi cover. (4) Remove the Wi-Fi interface on the right side of the panel. Pull out the Wi-Fi cable, and pull out the cable tie fixed on the panel. (Ⓐ) (5) Insert Wi-Fi interface into the water cover (Ⓑ) in the same direction as Photo 1-3, and fix it temporary. (6) Unhook the lower part (Ⓒ) of the panel. (7) First, hold the lower part of the right end of the panel, and hold the lower part of the left end of the panel. (8) Pull the panel slightly toward you, and then remove the panel by pushing it upward.	**Photo 1-1** 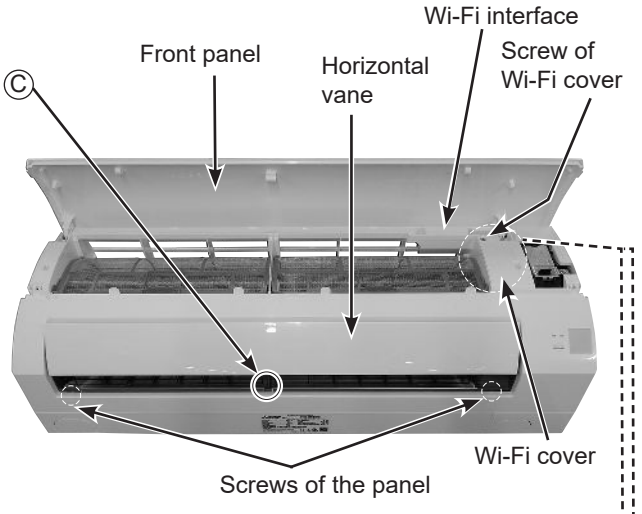 **Photo 1-2** 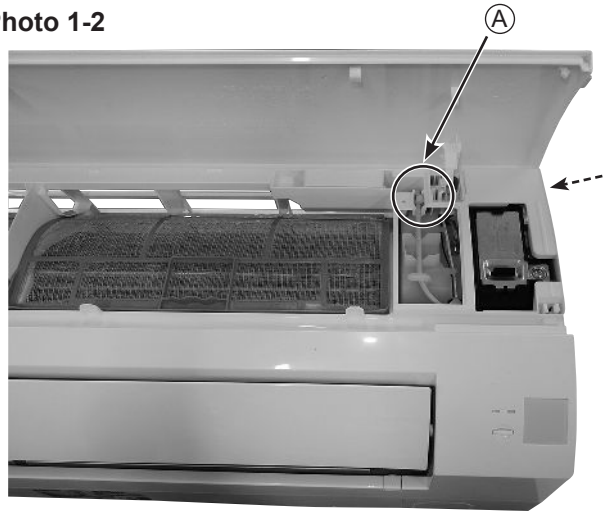 **Photo 1-3** 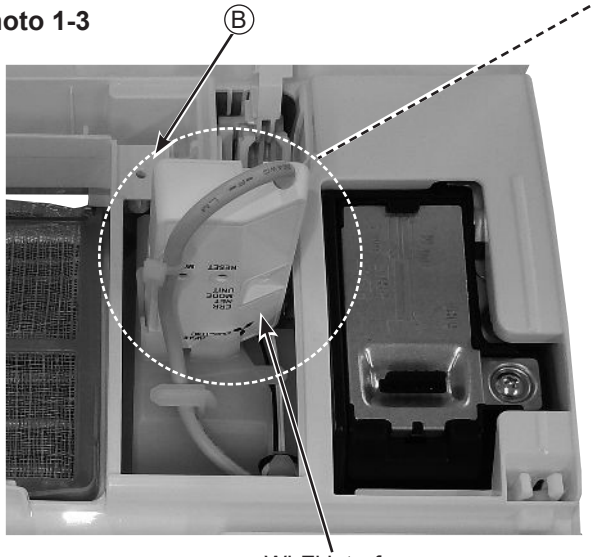

OPERATING PROCEDURE	PHOTOS/FIGURES

2. Removing the Wi-Fi interface

(1) Remove the panel (Refer to section 1.) and the corner box right.
(2) Remove the screw of the V.A. clamp.
Remove the V.A. clamp and the indoor/outdoor connecting wire.
(3) Remove the screw of the electrical cover, and remove the electrical cover.
(4) Disconnect the following connector (Photo 3-2):
<Indoor electronic control P.C. board>
CN110 (Wi-Fi interface)
(5) Remove the lead wire of the Wi-Fi interface from the hook of the cable guide and water cover.

3. Removing the indoor electrical box

(1) Remove the panel (Refer to section 1.) and the corner box right.
(2) Remove the screw of the V.A. clamp.
Remove the V.A. clamp and the indoor/outdoor connecting wire.
(3) Remove the earth wire connected to the indoor heat exchanger from the electrical box.
(4) Remove the screw of the electrical cover and remove the electrical cover.
(5) Remove the Wi-Fi interface (Refer to section 2.
(4) to (5)).
(6) Disconnect following connectors:
<Indoor electronic control P.C. board>
CN151 (Vane motor)
CN211 (Indoor fan motor)
CN112 (Indoor coil thermistor)
(7) Remove the wires of the indoor coil thermistors from the water cover, and remove the tab of the earth wire.
(8) Remove the water cover.
(9) Unhook the upper and lower catch of the electrical box, and pull out the electrical box.

NOTE:
To attach the electrical box, pass the wires connecting the indoor power monitor receiver SW P.C. board and the indoor electronic control P.C. board through A. Pass the lead wires of the fan motor through B as shown in the Photo 3-1.

Photo 3-2

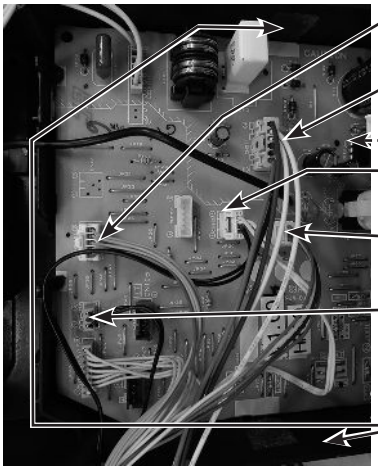

Photo 2

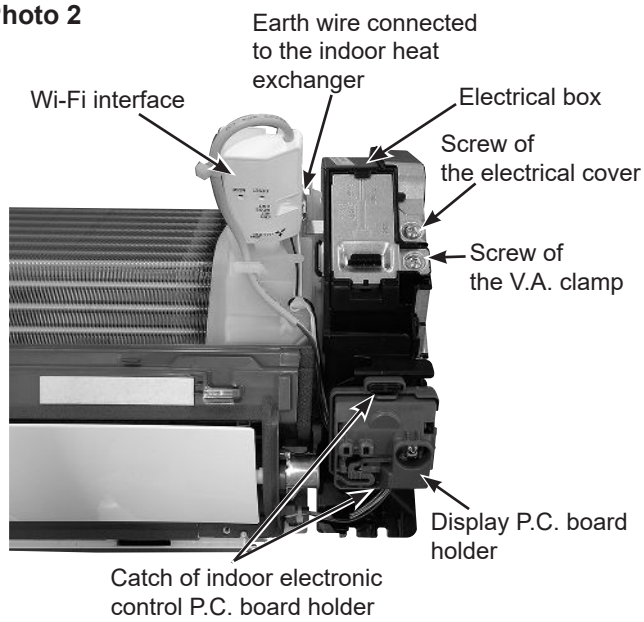

Photo 3-1

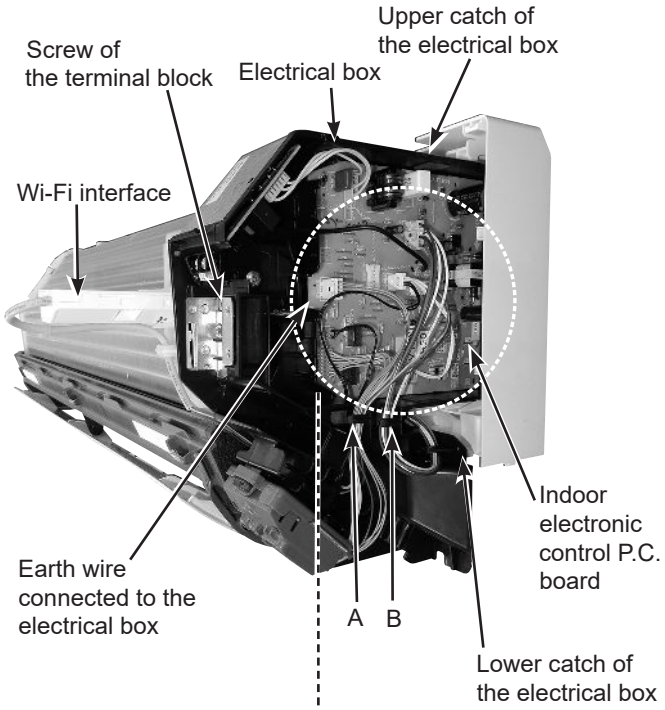

OPERATING PROCEDURE	PHOTOS/FIGURES
4. Removing the indoor terminal P.C. board, indoor electronic control P.C. board, and power monitor receiver SW P.C. board (1) Remove the panel. (Refer to section 1.) and the corner box right. (2) Remove the electrical box (Refer to section 3.). (3) Remove the screw of the terminal block and remove the earth wire connected to the electrical box from the indoor electronic control P.C. board. (4) Remove the display P.C. board holder from the electrical box. (5) Unhook the hooks of the display P.C. board holder (Photo 5) and remove the power monitor receiver SW P.C. board. (6) Remove the room temperature thermistor from the electrical box . Remove the indoor terminal P.C. board and the indoor electronic control P.C board from the electrical box. *1: Remove the insulations when replace the indoor electric control P.C. board.	**Photo 4** 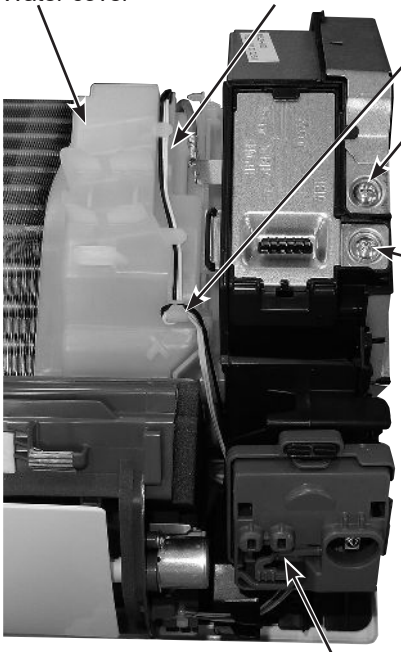 **Photo 5** 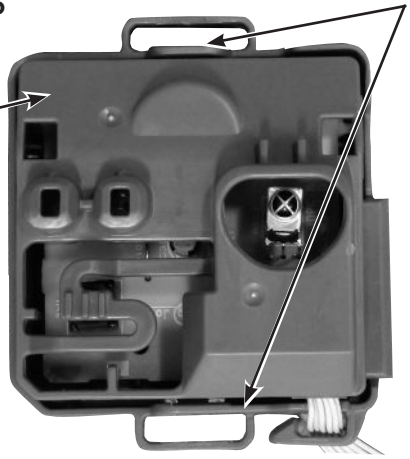

OPERATING PROCEDURE	PHOTOS/FIGURES
5. Removing the nozzle assembly and the vane motor **<Removing the nozzle assembly>** (1) Remove the panel (Refer to section 1.) and the corner box. (2) Remove the V.A. clamp, and then the indoor/outdoor connecting wire. (3) Remove the electrical cover. (Refer to section 2.) (4) Disconnect the following connectors on the electronic control P.C. board: CN151 (Vane motor) (5) Pull out the drain hose from the nozzle assembly and remove the nozzle assembly. **<Removing the vane motor>** (6) Cut the fixing band of the vane motor wire. (Photo6) (7) Remove the screws of the vane motor and remove the vane motor. (Photo 7) (8) Disconnect the connector from the vane motor.	**Photo 6** 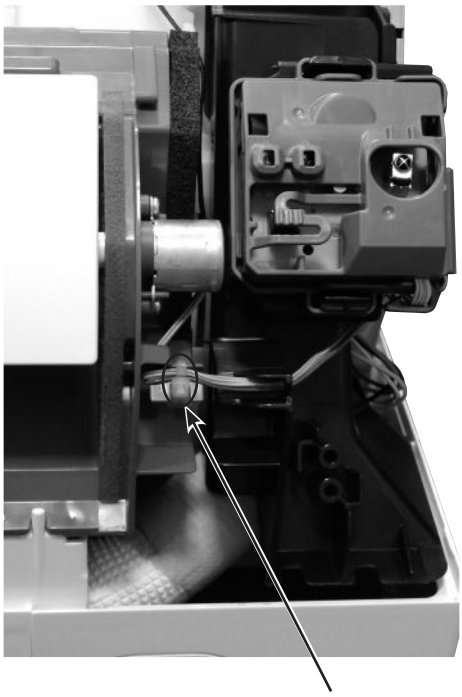 Fixing band of the vane motor wire **Photo 7** Screws of the vane motor

OPERATING PROCEDURE	PHOTOS/FIGURES

6. Removing the indoor fan motor, the indoor coil thermistor and the line flow fan

(1) Remove the panel. (Refer to section 1.)
Remove the corner box.
(2) Remove the electrical box and the nozzle assembly. (Refer to section 2, 3.)
(3) Remove the screws fixing the motor bed.
(4) Loosen the screw fixing the line flow fan.
(5) Remove the motor bed together with the indoor fan motor and the motor band.
(6) Disconnect the lead wire of the fan motor from the motor band.
(7) Disengage the hooks of the motor band and remove the motor band. Pull out the indoor fan motor.
(8) Remove the indoor coil thermistor from the heat exchanger.
* Install the indoor coil thermistor in its former position when assembling it.
(9) Remove the screws fixing the left side of the heat exchanger.
(10) Lift the heat exchanger, and pull out the line flow fan to the lower-left.
* When attaching the line flow fan, screw the line flow fan so 4 mm gap is provided between the right end of the line flow fan and the right wall of the air passage of the box (Figure 1).

Figure 1

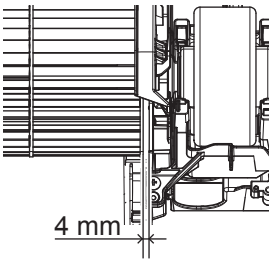

Photo 8

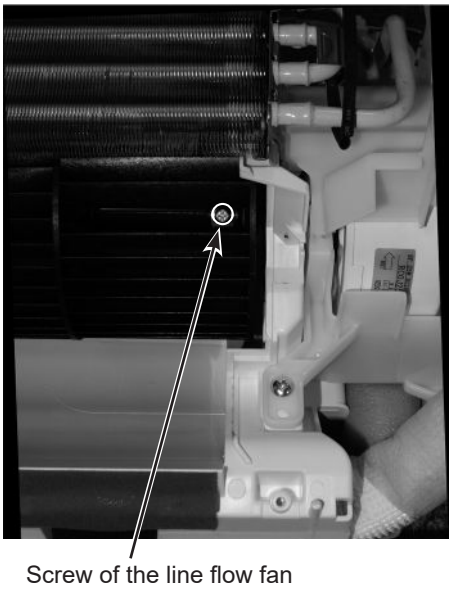

Photo 9

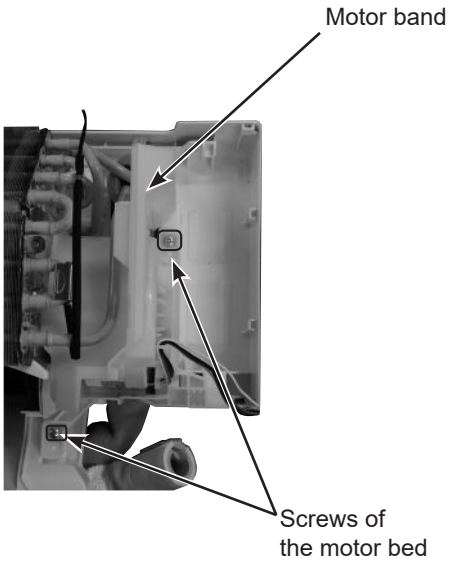

Photo 10

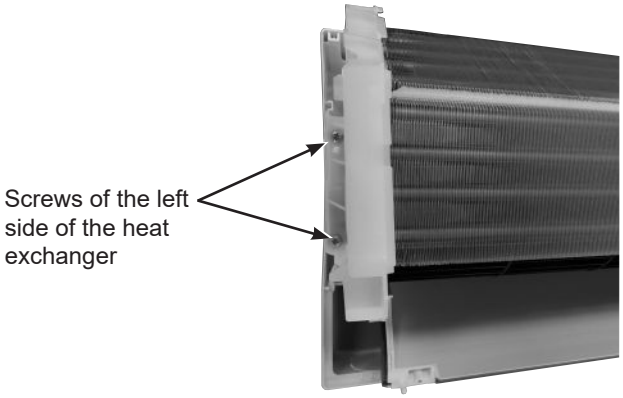

Photo 11

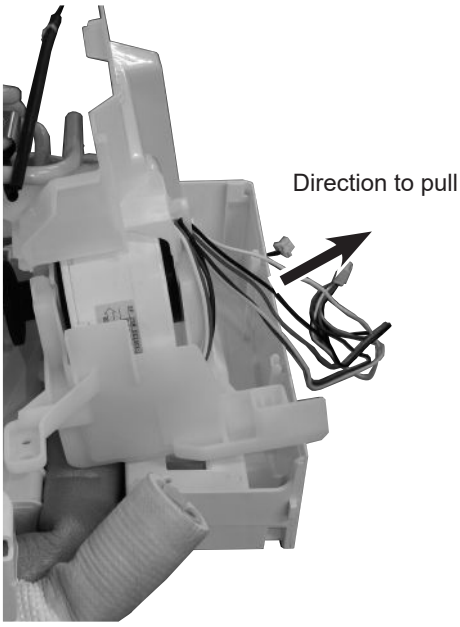

11-3. MSZ-HR60VF MSZ-HR71VF

NOTE: Turn OFF the power supply before disassembly.

OPERATING PROCEDURE	PHOTOS/FIGURES
1. Removing the panel (1) Remove the holizontal vane. (Figure 1) (2) Remove the screw caps on the panel and remove the screws of the panel. (3) Pull the panel slightly toward you, and then remove the panel by pushing it upward.	**Photo 1** 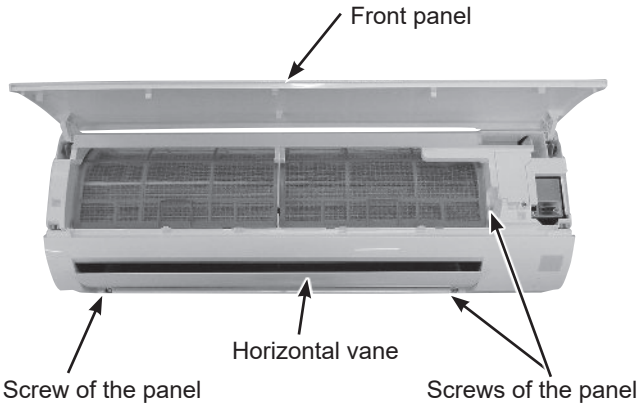 **Figure 1** 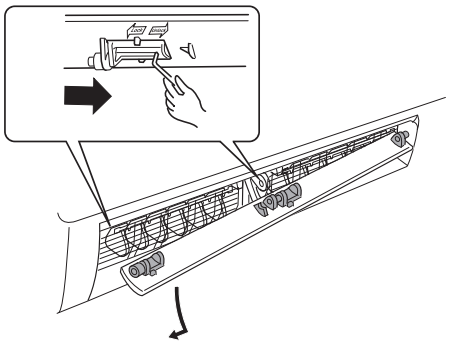

OPERATING PROCEDURE	PHOTOS/FIGURES

2. Removing the indoor power P.C. board and the electrical box

(1) Remove the panel (refer to section 1). Remove the right corner box.
(2) Disconnect the following connectors:
<Indoor electronic control P.C. board>
CN151 (Vane motor)
CN112 (Indoor coil thermistor)
CN10A (To the indoor power P.C. board)

(3) Unhook the catch on the left side of the control P.C. board holder. Pull the control P.C. board holder as if opening the door at 90 degrees. Remove the control P.C. board holder from the axial rod on the electrical box.
(4) Remove the screw of the V.A. clamp.
(5) Remove the V.A. clamp and the indoor/outdoor connecting wire.
(6) Remove the screws of the earth plate. (Photo 2)
(7) Remove the indoor coil thermistor from the water cover.
(8) Disengage the hooks of the water cover and remove the water cover.
(9) Remove the screw of the electrical cover and remove the electrical cover.
(10) Disconnect the CN211 (Indoor fan motor) from the indoor power P.C. board.
(11) Remove the upper catch of the electrical box, and pull out the electrical box.
NOTE:
To attach the electrical box, pass the wires connecting the indoor power P.C. board and the indoor electronic control P.C. board through Ⓐ. Pass the lead wires of the fan motor through Ⓑ as shown in the Photo 3.
(12) Disconnect the following connectors.
<Indoor power P.C. board>
CN201 (Terminal block)
CN20A (To the indoor electronic control P.C. board)

Photo 2

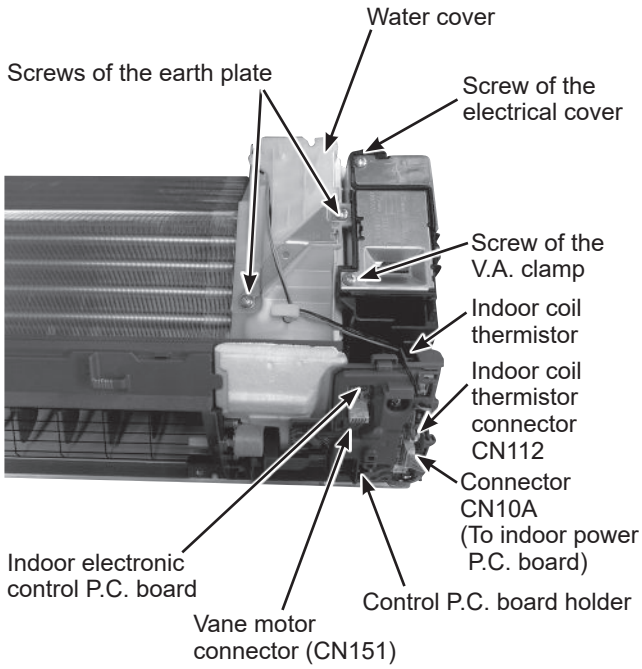

Photo 3

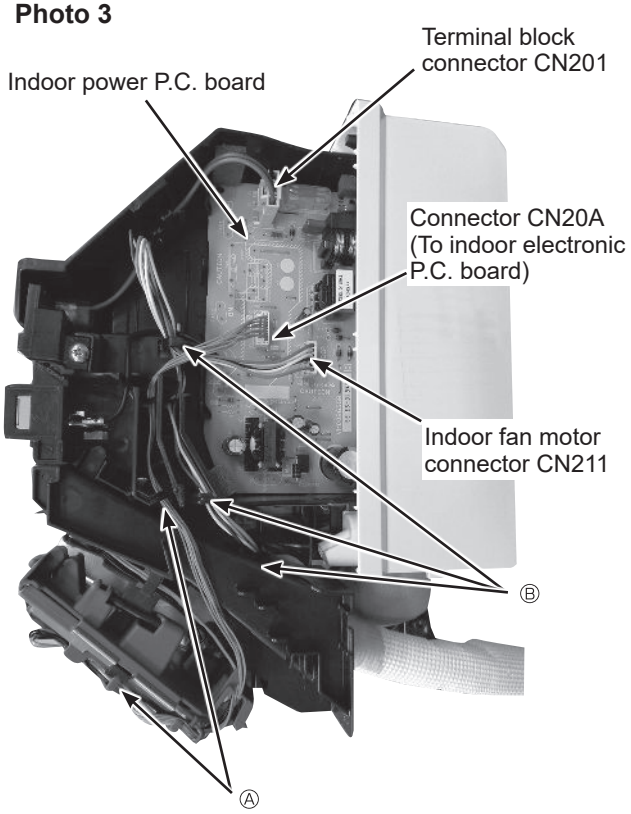

OPERATING PROCEDURE	PHOTOS/FIGURES
3. Removing the indoor electronic control P.C. board (1) Remove the panel. (Refer to section 1.) Remove the right corner box. (2) Disconnect the following connectors: <Indoor electronic control P.C. board> CN151 (Vane motor) CN112 (Indoor coil thermistor) CN10A (To the indoor power P.C. board) (3) Unhook the catch on the left side of the control P.C. board holder. Pull the control P.C. board holder as if opening the door at 90 degrees. Remove the control P.C. board holder from the axial rod on the electrical box. (4) Remove the room temperature thermistor from the back side of the control P.C. board holder. (5) Unhook the catches of the control P.C. board holder, and open the control P.C. board holder. (6) Remove the indoor electronic control P.C. board from the control P.C. board holder.	**Photo 4** **Control P.C. board holder (Inside)** 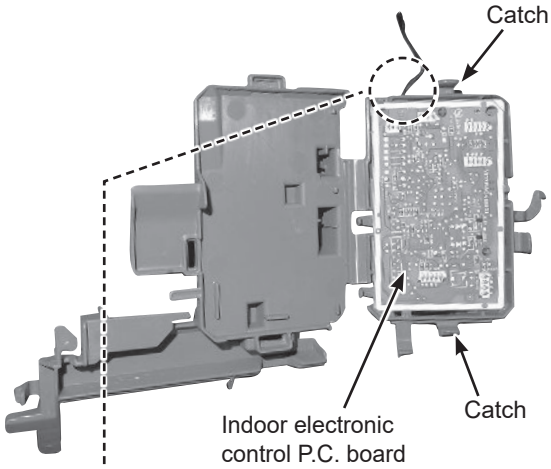 **Control P.C. board holder (Back side)** 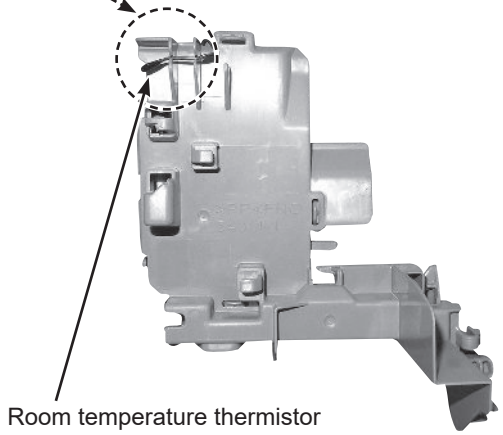
4. Removing the vane motor (1) Remove the panel. (Refer to section 1.) Remove the corner box. (2) Remove the control P.C. board holder, water cover and the electrical box. (Refer to section 2.) (3) Pull out the drain hose from the nozzle assembly and remove the nozzle assembly. (4) Remove the screws of the vane motor and remove the vane motor. (5) Disconnect the connector from the vane motor.	**Photo 5** 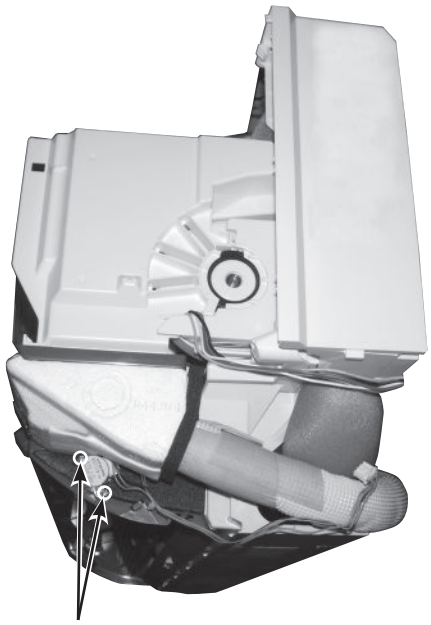

OPERATING PROCEDURE	PHOTOS/FIGURES

5. Removing the indoor fan motor, the indoor coil thermistor and the line flow fan

(1) Remove the panel. (Refer to section 1.) Remove the corner box.
(2) Remove the control P.C. board holder, the water cover, the electrical box and the nozzle assembly. (Refer to section 2.)
(3) Remove the screws fixing the motor bed.
(4) Loosen the screw fixing the line flow fan.
(5) Remove the motor bed together with the indoor fan motor and the motor band.
(6) Disconnect the lead wire of the fan motor from the motor band.
(7) Disengage the hooks of the motor band and remove the motor band. Pull out the indoor fan motor.
(8) Remove the indoor coil thermistor from the heat exchanger.
* Install the indoor coil thermistor in its former position when assembling it.
(9) Remove the screws fixing the left side and upper right side of the heat exchanger.
(10) Lift the heat exchanger, and pull out the line flow fan to the lower-left.
* When attaching the line flow fan, screw the line flow fan so 4 mm gap is provided between the right end of the line flow fan and the right wall of the air passage of the box (Figure 1).

Figure 1

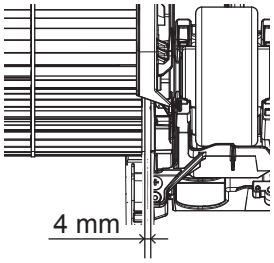

Photo 6

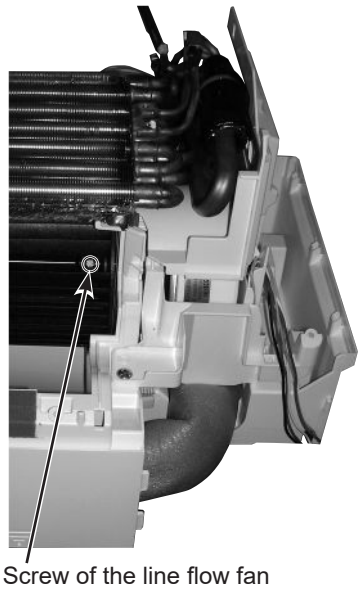

Photo 7

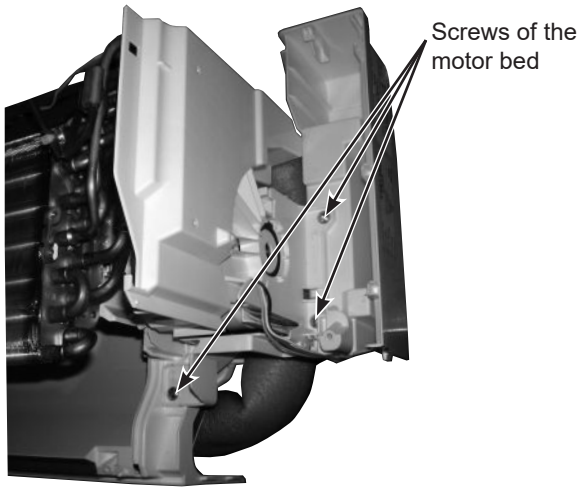

Photo 8

Screw of the upper right side of the heat exchanger

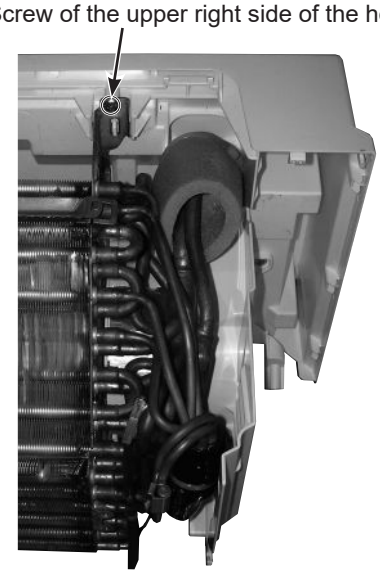

Photo 9

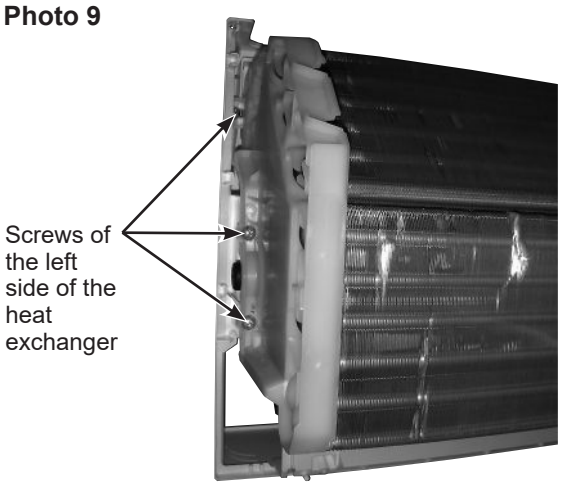

11-4. MSZ-HR60VFK MSZ-HR71VFK

NOTE: Turn OFF the power supply before disassembly.

OPERATING PROCEDURE	PHOTOS/FIGURES

1. Removing the panel

(1) Remove the horizontal vane (Figure 1).
(2) Remove the front panel.
(3) Remove the screw caps of the panel. Remove the screws of the panel.
(4) Remove the screw of the Wi-Fi cover on the upper right of the panel, and remove the Wi-Fi cover.
(5) Remove the Wi-Fi interface on the right side of the panel. Pull out the Wi-Fi cable, and pull out the cable tie fixed on the panel. (Ⓐ)
(6) Insert Wi-Fi interface into the water cover (Ⓑ) in the same direction as Photo 1-3, and fix it temporary.
(7) Unhook the lower part (Ⓒ) of the panel.
(8) First, hold the lower part of the right end of the panel, and hold the lower part of the left end of the panel.
(9) Pull the panel slightly toward you, and then remove the panel by pushing it upward.

Figure 1

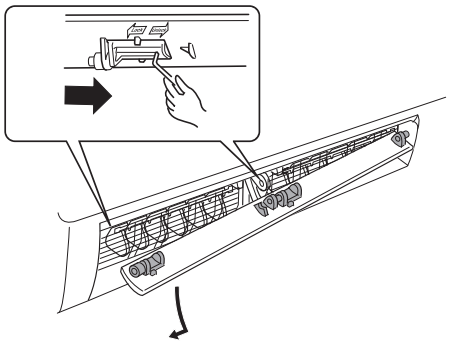

Photo 1-1

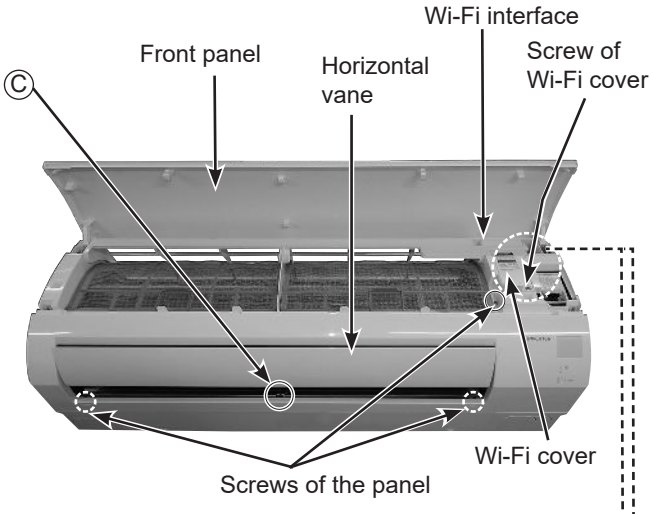

Photo 1-2

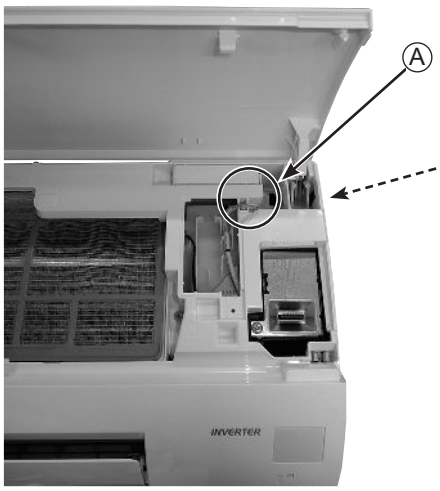

Photo 1-3

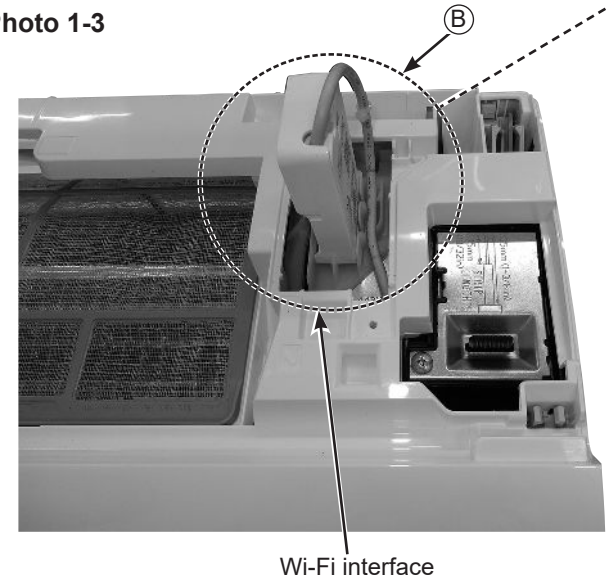

OPERATING PROCEDURE	PHOTOS/FIGURES

2. Removing the Wi-Fi interface

(1) Remove the panel (Refer to section 1.) and the corner box right.
(2) Remove the screw of the V.A. clamp.
Remove the V.A. clamp and the indoor/outdoor connecting wire.
(3) Remove the screw of the electrical cover, and remove the electrical cover.
(4) Disconnect the following connector (Photo 3-2):
<Indoor electronic control P.C. board>
CN105 (Wi-Fi interface)
(5) Remove the lead wire of the Wi-Fi interface from the hook of the cable guide and water cover.

NOTE:
When attaching the Wi-Fi interface, bundle up the lead wires of the Wi-Fi interface and hook them on A as shown in Photo 3-1.

***1:** Remove the insulations when replace the indoor power P.C. board.

Photo 2

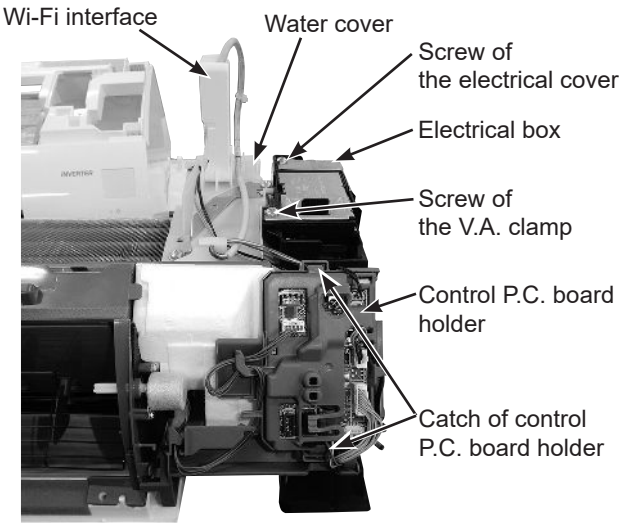

Photo 3-2

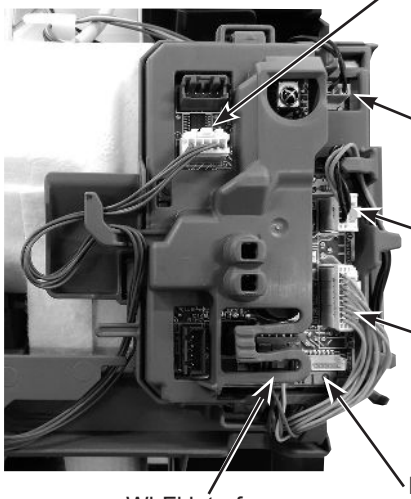

Photo 3-1

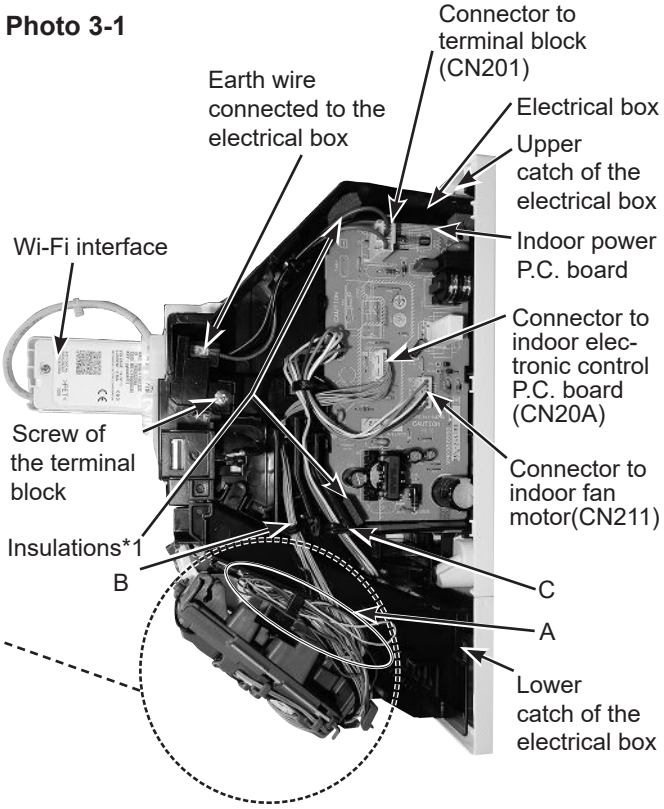

OPERATING PROCEDURE	PHOTOS/FIGURES
3. Removing the indoor power P.C. board and the electrical box (1) Remove the panel (refer to section 1). Remove the corner box right . (2) Disconnect the following connectors: <Indoor electronic control P.C. board> CN151 (Vane motor) CN112 (Indoor coil thermistor) CN10A (To the indoor power P.C. board) (3) Unhook the catch on the left side of the control P.C. board holder. Pull the control P.C. board holder as if opening the door at 90 degrees. Remove the control P.C. board holder from the axial rod on the electrical box. (4) Remove the screw of the V.A. clamp. (5) Remove the V.A. clamp and the indoor/outdoor connecting wire. (6) Remove the screw of the electrical cover and remove the electrical cover. (7) Remove the Wi-Fi interface (Refer to section 2.(4) to (5)). (8) Remove the screws of the earth plate. (Photo 4) (9) Remove the indoor coil thermistor from the water cover. (10) Disengage the hooks of the water cover and remove the water cover. (11) Remove the screw of the electrical cover and remove the electrical cover. (12) Disconnect the CN211 (Indoor fan motor) from the indoor power P.C. board. (13) Remove the upper catch of the electrical box, and pull out the electrical box. NOTE: To attach the electrical box, pass the wires connecting the indoor power P.C. board and the indoor electronic control P.C. board through B. Pass the lead wires of the fan motor through C as shown in the Photo 3-1. (14) Disconnect the following connectors. <Indoor power P.C. board> CN201 (Terminal block) CN20A (To the indoor electronic control P.C. board)	**Photo 4** 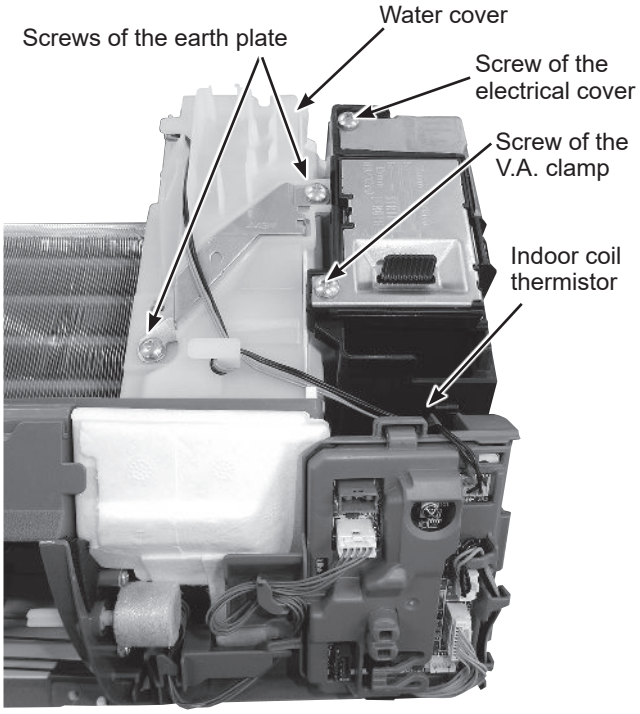

OPERATING PROCEDURE	PHOTOS/FIGURES
4. Removing the indoor electronic control P.C. board (1) Remove the panel. (Refer to section 1.) Remove the corner box right. (2) Remove the Wi-Fi interface. (Refer to section 2 (2) to (5).) (3) Disconnect the following connectors: <Indoor electronic control P.C. board> CN151 (Vane motor) CN112 (Indoor coil thermistor) CN10A (To the indoor power P.C. board) (4) Unhook the catch on the left side of the control P.C. board holder. Pull the control P.C. board holder as if opening the door at 90 degrees. Remove the control P.C. board holder from the axial rod on the electrical box. (5) Remove the room temperature thermistor from the back side of the control P.C. board holder. (6) Unhook the catches of the control P.C. board holder, and open the control P.C. board holder. (7) Remove the indoor electronic control P.C. board from the control P.C. board holder.	**Photo 5** **Control P.C. board holder (Inside)** 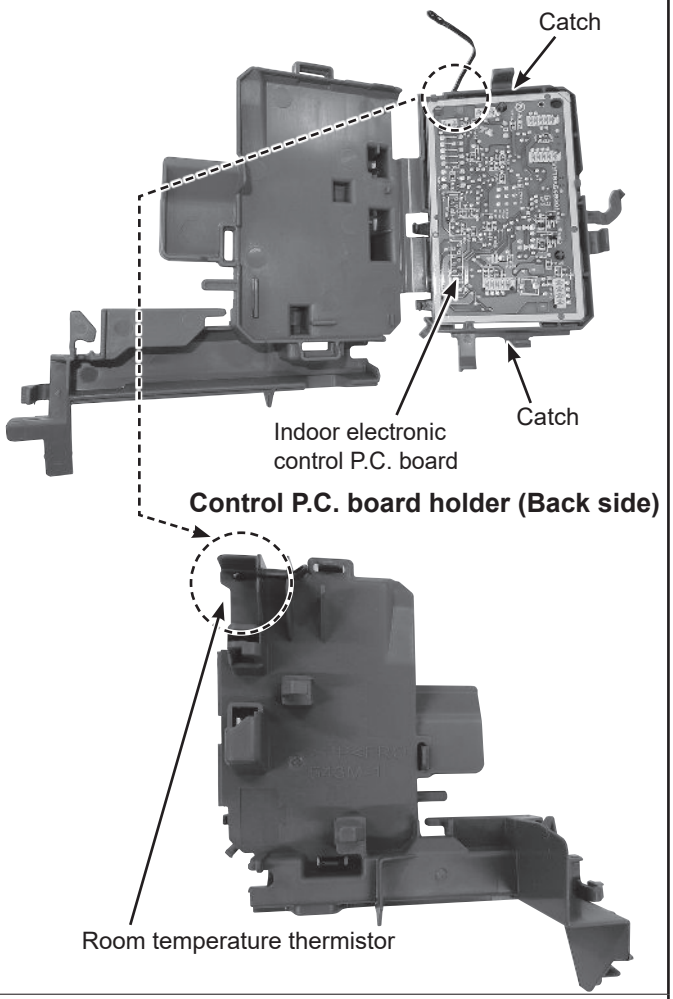
5. Removing the vane motor (1) Remove the panel. (Refer to section 1.) Remove the corner boxes. (2) Remove the Wi-Fi interface, indoor control P.C. board holder, water cover and the electrical box. (Refer to section 2 to 3.) (3) Pull out the drain hose from the nozzle assembly and remove the nozzle assembly. (4) Remove the screws of the vane motor and remove the vane motor. (5) Disconnect the connector from the vane motor.	**Photo 6** 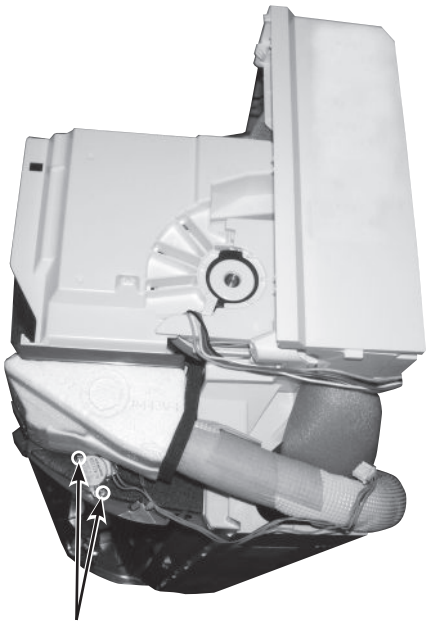

OPERATING PROCEDURE	PHOTOS/FIGURES

6. Removing the indoor fan motor, the indoor coil thermistor and the line flow fan

(1) Remove the panel. (Refer to section 1.) Remove the corner box.
(2) Remove the Wi-Fi interface, control P.C. board holder, the water cover, the electrical box and the nozzle assembly. (Refer to section 2 to 3.)
(3) Remove the screws fixing the motor bed.
(4) Loosen the screw fixing the line flow fan.
(5) Remove the motor bed together with the indoor fan motor and the motor band.
(6) Disconnect the lead wire of the fan motor from the motor band.
(7) Disengage the hooks of the motor band and remove the motor band. Pull out the indoor fan motor.
(8) Remove the indoor coil thermistor from the heat exchanger.
* Install the indoor coil thermistor in its former position when assembling it.
(9) Remove the screws fixing the left side and upper right side of the heat exchanger.
(10) Lift the heat exchanger, and pull out the line flow fan to the lower-left.
* When attaching the line flow fan, screw the line flow fan so 4 mm gap is provided between the right end of the line flow fan and the right wall of the air passage of the box (Figure 1).

Figure 1

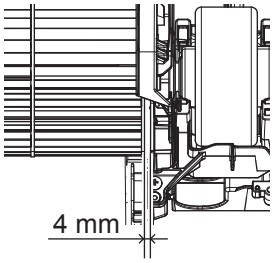

Photo 7

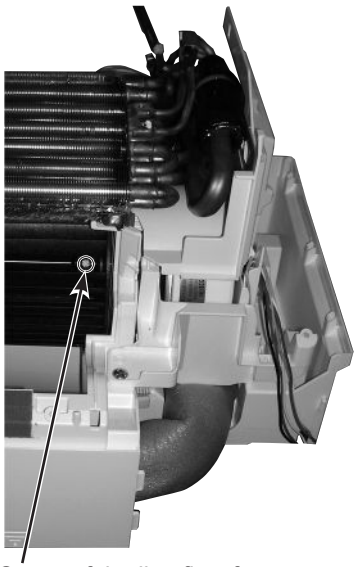

Screw of the line flow fan

Photo 8

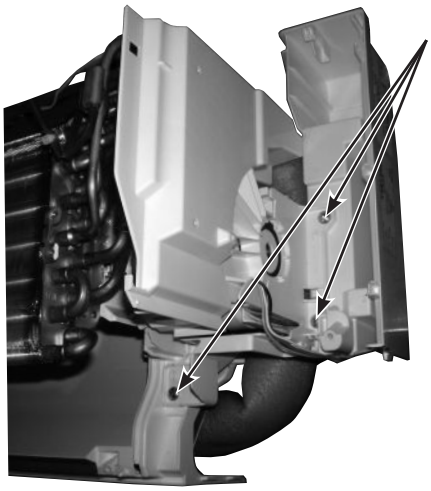

Screws of the motor bed

Photo 9

Screw of the upper right side of the heat exchanger

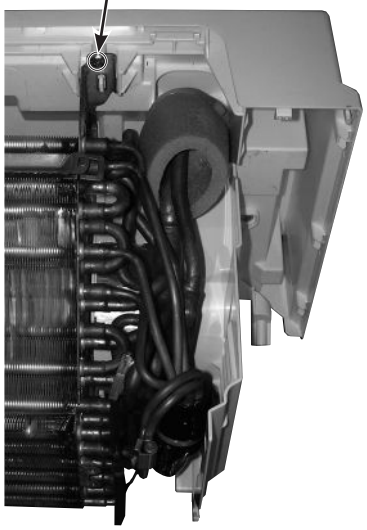

Photo 10

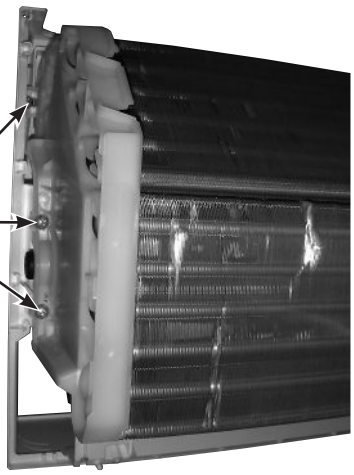

Screws of the left side of the heat exchanger

Fixing the indoor coil thermistor

* There are 2 forms of parts for fixing the indoor coil thermistor.

Clip shape

Holder shape

When fixing the indoor coil thermistor to the clip-shape/holder-shape part, the lead wire should point down.

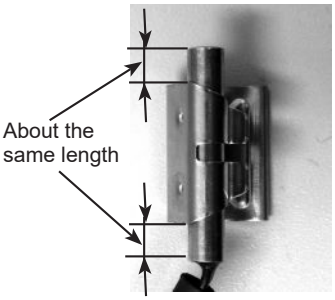

Position and procedure for mounting the clip-shape part

1. Set the indoor coil thermistor in the center of the clip-shape part.

2. Check the (marked) mounting position.

3. Mount the clip-shape part.

NOTE:

- Take care to avoid loss and accidental falling of the clip-shape part inside the unit.
- Mount the clip-shape part on the marked position.
- Do not pull the lead wire when removing the indoor coil thermistor.

MITSUBISHI ELECTRIC CORPORATION

HEAD OFFICE: TOKYO BUILDING, 2-7-3, MARUNOUCHI, CHIYODA-KU, TOKYO 100-8310, JAPAN

© Copyright 2018 MITSUBISHI ELECTRIC CORPORATION
Issued: Dec. 2021. No. OBH822 REVISED EDITION-F
Issued: Oct. 2021. No. OBH822 REVISED EDITION-E
Issued: Feb. 2021. No. OBH822 REVISED EDITION-D
Issued: Nov. 2020. No. OBH822 REVISED EDITION-C
Issued: Feb. 2020. No. OBH822 REVISED EDITION-B
Issued: Jan. 2020. No. OBH822 REVISED EDITION-A
Published: Oct. 2018. No. OBH822
Made in Japan

Specifications are subject to change without notice.